Manual
Reference Point System
GRAMMER
(RPS)

R&D

Table of Contents

1 Foreword ... 3

2 Scope ... 4

3 Terminology ... 4
3.1 The "3-2-1" rule (plane, line, point) ... 5
3.2 Virtual RPS planes in the SP ... 7
3.3 RPS points in the STANDARD part (SP) resp. STANDARD product (SP) ... 8
3.4 Positioning the RPS points in the SP ... 9
3.5 Selection of RPS points ... 10
3.5.1 Selection of the RPS points -> rotationally symmetrical parts ... 11
3.5.2 Selection of the RPS points -> flexible special components (cable harness, bowden pull wire etc.) 11
3.5.3 Selection of the RPS points -> "C parts" (rivets, washers etc.) and geometrically simple parts ... 12
3.5.4 Selection of the RPS points -> non-rigid parts ... 13
3.5.4.1 Dimensioning of non-rigid parts ... 13
3.6 Decision criteria for positioning the RPS points ... 14
3.7 RPS planes in the drawing ... 15
3.7.1 Alignment of RPS planes in the drawing which are not "mesh-parallel" in their installation position 16
3.8 RPS points in the drawing ... 18
3.8.1 Symbols for the RPS in the drawing ... 19
3.9 Functional dimensioning based on RPS ... 20

4 Examples of assemblies with RPS ... 22

5 GRAMMER Reference Point (GRP) for seats etc. ... 24

6 Notes on the application of the "RPS philosophy" in the SP (design in the CAD system) ... 26

7 Person in charge of the RPS tool ... 26

8 Purchased parts with RPS ... 26

9 Demo programme "VW" with explanations and sample exercises ... 27

10 Design of the SP in tolerance centre position ... 27

11 Cited standards / related standards ... 27

12 Why RPS? The pros and cons ... 28
12.1 Advantages of using RPS ... 28
12.2 Disadvantages of using RPS ... 28

13 Miscellaneous ... 29
13.1 Programme for reading out the RPS points in a table ... 29
13.2 Auxiliary tables in the drawing ... 30
13.3 Tolerance chain tools / based on “Excel” ... 31
13.3.1 Tool for statistical tolerance chain / “Excel” ... 31
13.3.2 Tool for tolerance chain Automotive / “Excel” ... 31
13.4 VW customer standard regarding the application of the "Reference Point System" ... 32

14 Applicable Documents ... 32

15 Changes ... 32

1 Foreword

The instructions regarding the GRAMMER Reference Point System (RPS) have been created in September 2007 for the first time. The component of the design manual has been created in coordination with the divisions Off-Road, Automotive and Railway (the Truck division has been added later).
The interfaces for development such as Quality, CAD Engineering, Metrology, IE etc. also participated in the preparation.
Due to the integration of the GRAMMER Reference Point System into the GRAMMER Business System (GBS), the manual has been updated and revised in March 2012. The experiences with RPS made during the past years have been integrated into the current status.

Depending on the department, RPS has been integrated more or less into components and drawings since 2007. Moreover, the understanding of RPS is not developed to an equal extent for all functional areas and suppliers working with components and drawings provided with RPS.
Unfortunately, there are also documents containing a variant of "RPS" which - however - does not comply with the specifications of the GRAMMER Reference Point System valid since 2007.
Of course, positive examples with the GRAMMER Reference Point System or components without "official"/indicated RPS can be found which - however - are oriented and dimensioned with regard to the basic principle of RPS and the tolerance / functional chains.

According to the basic principle of the tolerance management called "Error prevention instead of error elimination", the philosophy of the GRAMMER Reference Point System (RPS) is suited to achieve a maximum positive effect in the fields of quality, process costs and modification effort.

It is the task of every single one to work out the advantages of RPS in terms of a recurrent theme in the design, manufacturing, metrology and tolerance chain process to benefit from RPS together as "GRAMMER".

The present version tries to communicate the system of the GRAMMER Reference Point System in a way which is as self-explanatory as possible and is intended to be used as reference book concerning this topic and as basic concept for trainings.

Our thanks go to all people involved in the creation of the GRAMMER Reference Point System!

2 Scope

The GRAMMER Reference Point System, referred to as "RPS" in the following, shall be used for all components and drawings. This shall concern both individual parts and assemblies (joined, welded, assembled etc.).
Besides the procedure concerning the application of RPS, exceptions and deviations are described in this manual as well.

For some customers (such as e.g. VW), it might be necessary to integrate additional and/or expanding designations into the documents.
In principle, the fundamentals for the GRAMMER Reference Point System and customer-specific reference systems (with regard to alignment, dimensioning, tolerance chain and functional chain) are identical. They are only different regarding the optical appearance and designation.

3 Terminology

Note:
For reasons of simplification, the terms "component" or "assembly" will be referred to as "SP"
(for: "STANDARD part / STANDARD product")
in the following.

3.1 The "3-2-1" rule (plane, line, point)

Every rigid body has 6 degrees of freedom in three-dimensional space:
3 translational degrees of freedom parallel to the axes of a reference system ("push" 3 times in x, y, z direction)
3 rotational degrees of freedom *about* the axes of the reference system ("turn" 3 times around x, y, z axes)

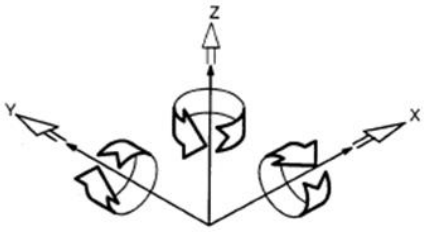

In order to fix a non-rotationally symmetrical component unambiguously in space, it has to be deprived of its 6 degrees of freedom.
A square nut, for example, might serve as a simple example regarding the deprivation of the 6 degrees of freedom and the application of RPS:
In this example, the nut is placed onto a plane (sheet metal part etc.), is put against a limit stop (raised angle, welding calibre etc.) with one of its four sides and finally is set out via the thread axle.
Due to the fact that it is placed onto the plane, the nut is deprived of two rotational (turning it e.g. around the x and y axes) degrees of freedom and of one translational (pushing it in z direction) degree of freedom *(primary alignment, first plane).*
By putting one of its square surfaces against a limit stop, the nut is deprived of another translational degree of freedom (pushing it e.g. in y direction) and of another rotational (turning it around the z axis) degree of freedom *(secondary alignment, second plane, perpendicular to the first plane).*
The last translational degree of freedom (pushing the nut in x direction) is withdrawn e.g. by setting it out *(with sword pin).* Now, the square nut (or the SP) is fixed / arranged unambiguously in space *(tertiary alignment, third plane, perpendicular to the first two planes). See also DIN EN ISO 5459-2013.*

Here, in this example, the position of the square nut is defined as follows:

Plane (3 RPS points)	A1 - A2 - A3
Line (2 RPS points)	B1 - B2
Point (1 RPS point)	C1

➔ "3-2-1" rule

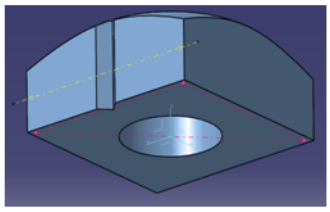

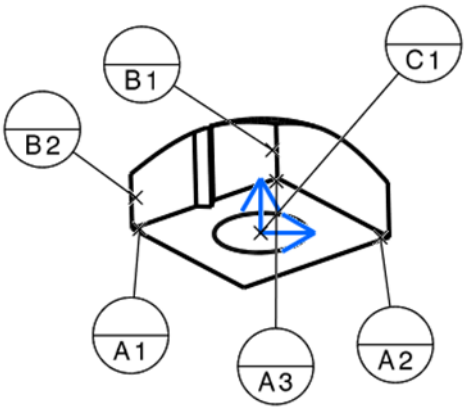

Referenz-Punkt-System GRAMMER
REFERENCE-POINT-SYSTEM GRAMMER

3-2-1 Rule:

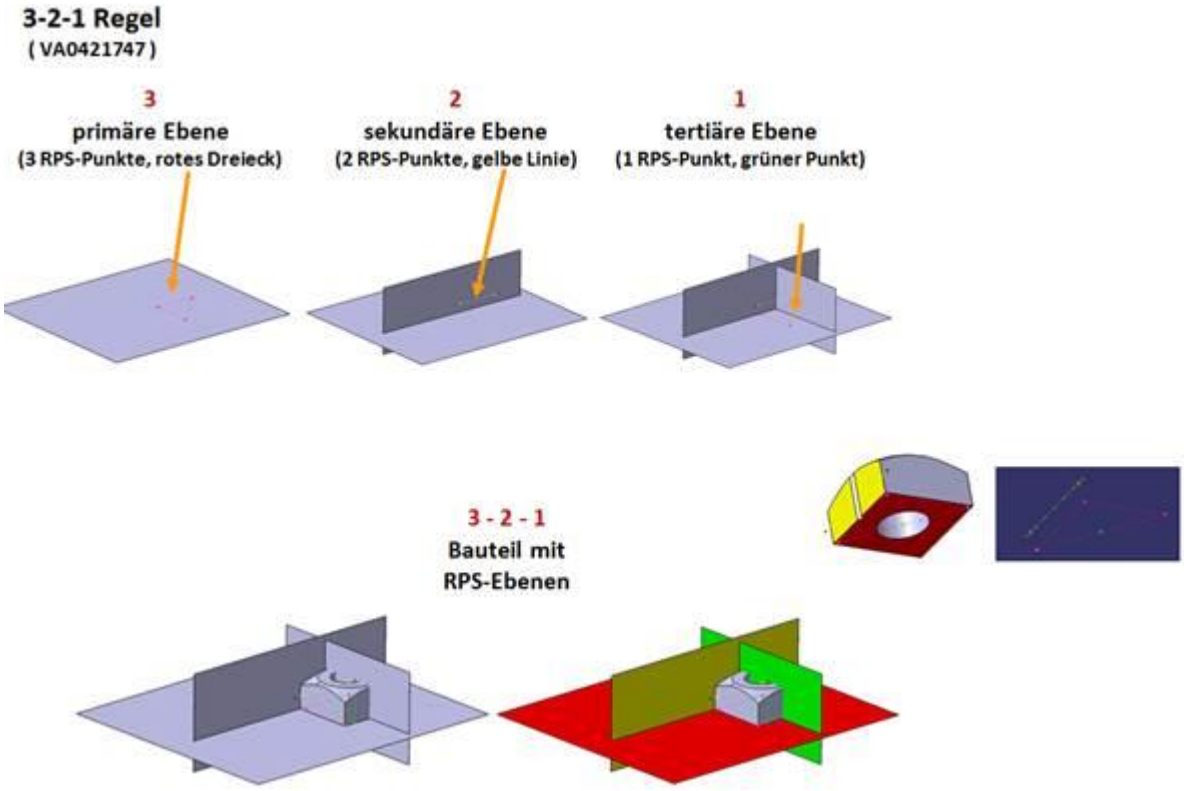
3-2-1 Regel
(VA0421747)
3
primäre Ebene
(3 RPS-Punkte, rotes Dreieck)
2
sekundäre Ebene
(2 RPS-Punkte, gelbe Linie)
1
tertiäre Ebene
(1 RPS-Punkt, grüner Punkt)
3 - 2 - 1
Bauteil mit
RPS-Ebenen

3.2 Virtual RPS planes in the SP

For clarification, the RPS planes are
marked in colour (derived from traffic light colours).

RPS plane A = red
RPS plane B = yellow
RPS plane C = green

In CATIA, the SP also shows RPS points and associated polylines in different colours (red, yellow, green).

The RPS planes A, B and C are defined as follows:
Plane A results from the three points A1-A2-A3.
Plane B is formed by projecting the line B (B1 - B2) *perpendicular* onto plane A.
Point C is projected vertically onto the planes A and B -> plane C.

Remark: The planes A, B and C are perpendicular to each other.

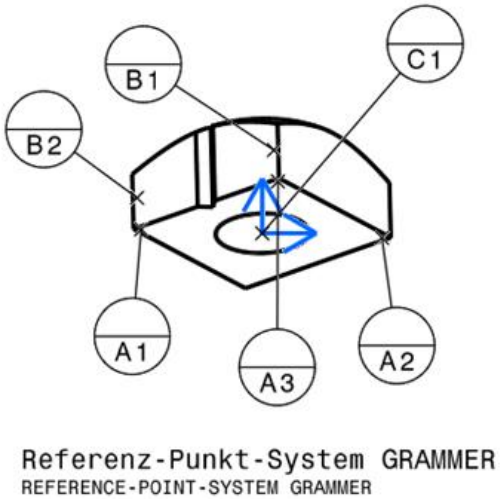

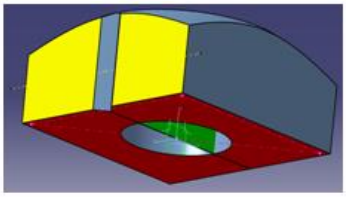

3.3 RPS points in the STANDARD part (SP) resp. STANDARD product (SP)

The 6 RPS points ("3-2-1") A1 to A3, B1 and B2, C1 (as well as the possibly required supporting point S1) can be found in the STANDARD part resp. STANDARD product of the GRAMMER environment CATIA.

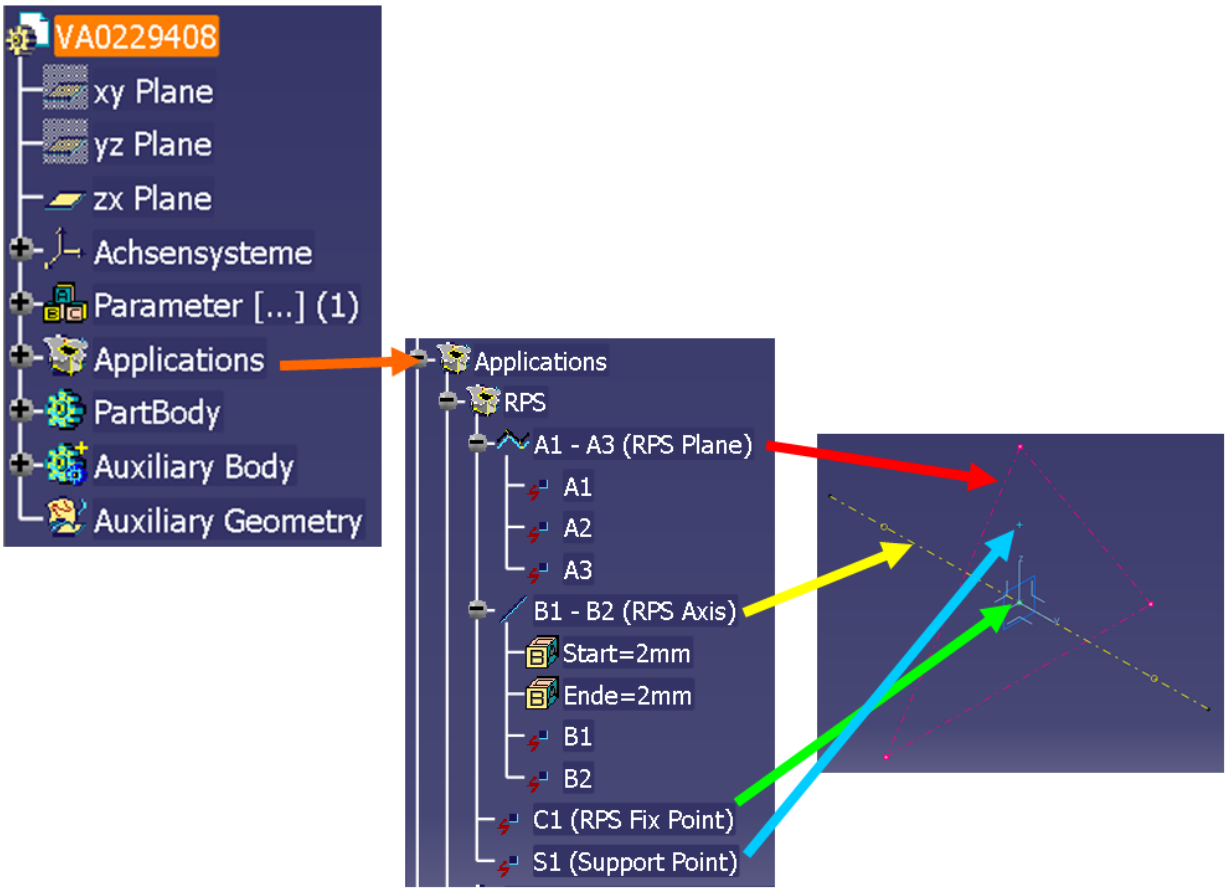

These RPS points are applied to the SP by means of conditions or via coordinates. In CATIA, a red polyline is shown for A1-A2-A3 (plane A), a yellow line for B1-B2 and a green point (C1).
In CATIA, the supporting points S1-Sn are shown in blue colour. If more than one supporting point is required, S1 can be copied and renamed (S1, S2, - Sn).

3.4 Positioning the RPS points in the SP

Basically, the positioning of the RPS points is characterized by the alignment of the SP with the alignment provider (*in order of* the tolerance / functional chain) SP.
Terms regularly used in this context are e.g. "alignment provider" and "alignment recipient".
Normally, in case of a driver's seat, the supporting structure is the alignment provider and an add-on part (upholstery, armrest, cover etc.) is the alignment recipient. Of course, this view is relative.
For the example of the driver's seat, the add-on parts are aligned with the supporting structure.
As a consequence, the basis for the RPS definition is the plane onto which the add-on part is assembled, the line with which the component is aligned and the point with which the add-on part is fixed.
To some extent, RPS points can be geometrically identical. A *derived* virtual point at the SP can take up a maximum of three degrees of freedom (3 RPS points).
Advantage of the definition of RPS points in the SP: RPS can be “shown” in CAD and can be used for preparing a drawing.
RPS can be shown in assemblies etc. in order to be able to relate to the tolerance / functional chains.
The following users can show the RPS in a component or assembly and identify the function, alignment, interface etc.
Under ideal conditions, the RPS planes *are* the basis for the generation of the structure tree in CAD (e.g. CATIA). Advantage: The following changes can be integrated more efficiently, changes only influence the corresponding partial tolerance chain of the part and do not shift in an undefined manner areas in the SP which are not concerned.

See: VA0060899

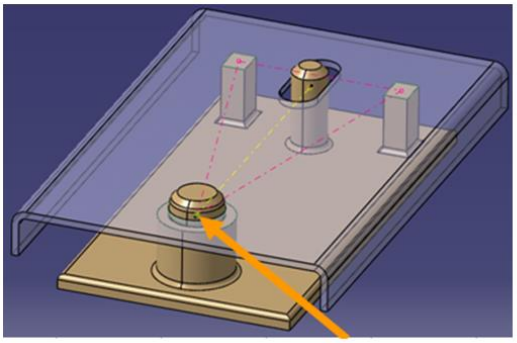

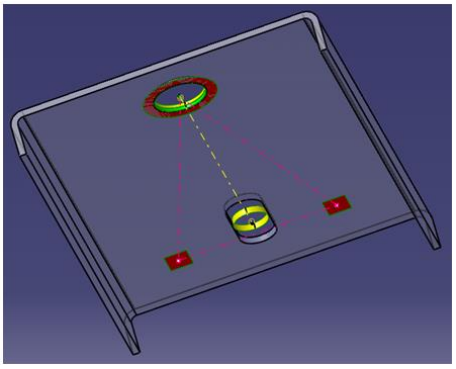

Remark: In this example, the RPS points A1, B1 and C1 are identical (as a result, the measuring effort is lower and *a simpler construction of the measuring equipment).*

Example for processing equipment (or receptacle in the "follow-on composite tool") or measuring equipment:

RPS location for processing

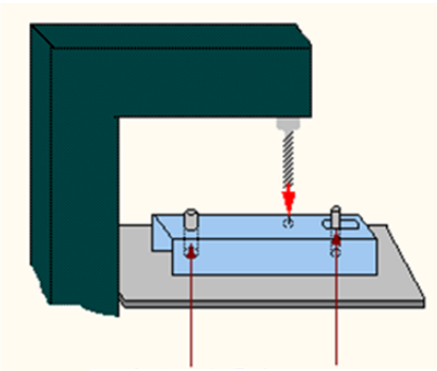

Part located at reference points

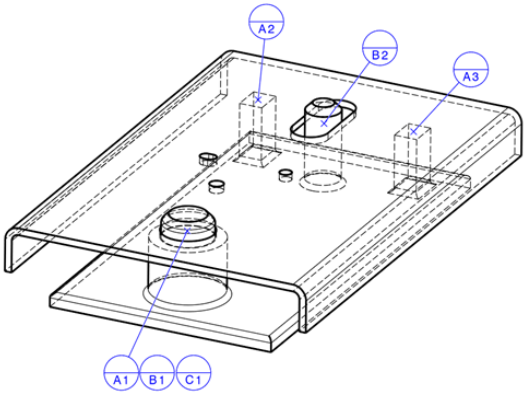

3.5 Selection of RPS points

Under ideal conditions, the RPS points are defined as early as possible in the product development process together in a team (development, quality, metrology, production), *so that only one RPS-System is used consistently in construction, production and for measurement.*

It is important, there are no influences to the function RPS in that way, that the RPS is misused as alignment RPS, measurement RPS, production RPS etc. have to be avoided!

The most important basis regarding the selection of the position of the RPS points is the physical alignment of the SP with the alignment provider (tolerance / functional chain).
The function of the part is crucial for the position of the RPS (functional RPS).

If possible, the RPS points should be positioned in stable areas of a component which will not be changed even during further development and/or manufacturing processes and which will still be accessible for measurement.
Important: After the documents have been forwarded to suppliers, other plants etc. the defined RPS of an SP must not be changed by suppliers, other plants etc.! Reason: Otherwise, tolerance chains would not be consistent anymore and dimensioning would not be correct anymore.

With help of RPS, possible negative effects in the SP with regard to alignment, measurement, production, tolerance / functional chain can be recognized *early*. If *necessary*, only an optimisation of the interface of the SP to the alignment provider or, *if* possible, an adjustment of the alignment provider regarding its interface to the SP can *solve this issue.*

The points A1, A2, A3 *should be placed with the largest possible distance to each other (the largest possible functional triangle).* Moreover, a large distance between B1 and B2 is *useful (longest possible functional line).*

However, the points have to be chosen in such a way that they are still in the area of the interface ("contact area" between alignment provider and alignment recipient).

If by using the largest possible distance of the RPS points, a small A plane or a short B line is produced at the SP, this indicates a large and thus negative impact on the tolerance chain → take measures and optimise, if necessary *(otherwise there is a danger of multiplication of the deviation → intercept theorem).*

Important note: The line B1-B2 must not be perpendicular to plane A, because otherwise it is not possible to derive a plane B!

If the A plane is diagonal to the "normal position" of the SP: see chapter 3.7.1 of the manual.

3.5.1 Selection of the RPS points -> rotationally symmetrical parts

For rotationally symmetrical parts ("turning parts" such as *axles*, *bolts* etc.), the plane A (including the RPS points A1-A3) *is not necessary*.
Only the axis (plane B) and the contact surface (plane C, perpendicular to B) are specified.

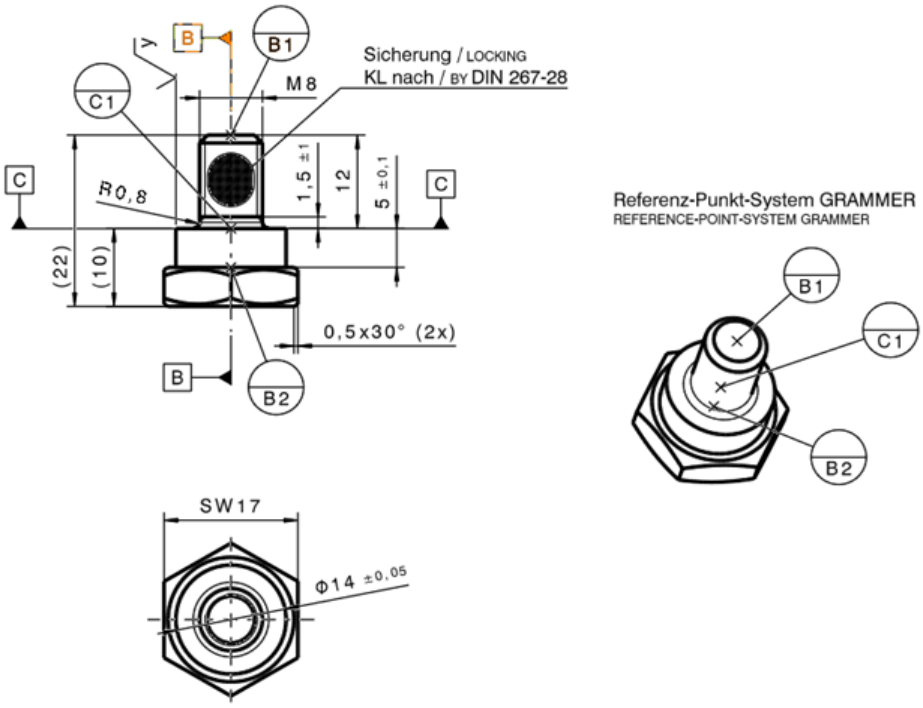

3.5.2 Selection of the RPS points -> flexible special components (cable harness, bowden pull wire etc.)

For flexible components such as cable harnesses, bowden *cables* etc., the planes A and B *are not necessary*. The plane C indicates the interface to the alignment provider.

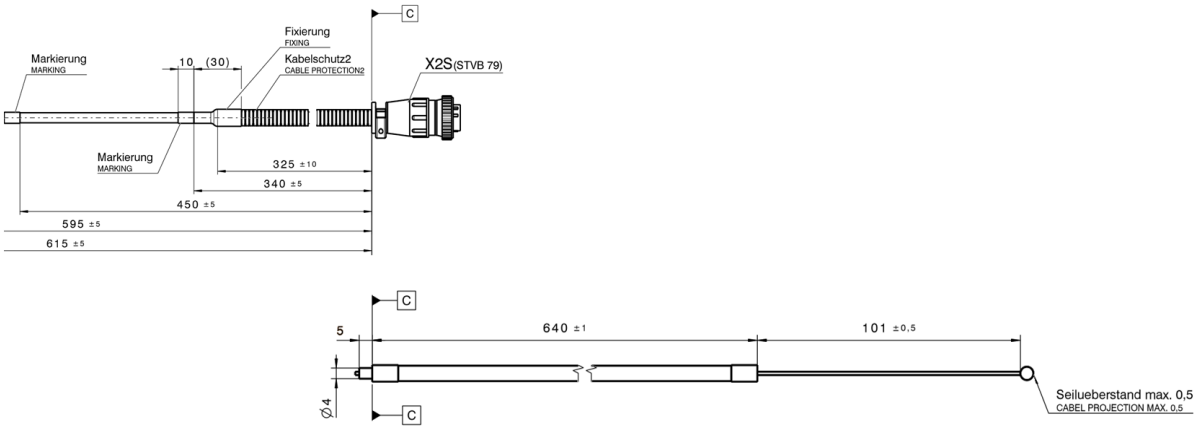

3.5.3 Selection of the RPS points -> "C parts" (rivets, washers etc.) and geometrically simple parts

For C parts such as rivets, washers, standard screws, simple sockets, reinforcing sheets, flat lugs, strips etc., no RPS has to be allocated, if these parts do not *have* any important dimensional functional chains.

3.5.4 Selection of the RPS points -> non-rigid parts

For flexible parts such as covers made of plastic, upholstery, wire inserts, large thin-wall sheet metal parts etc. it might be reasonable to define so-called supporting points (S1 to Sn in RPS).
At these supporting points, the component will be supported during measurement by means of the measuring equipment etc. In RPS, supporting points must be positioned only at such places which can be supported in reality as well (see example of plastic cover at the back structure). The deviation towards the supporting point must be determined and documented during measurement and the maximum admissible contact pressing force as well as the direction of force must be specified in the drawing.

Example of an instable part with supporting points S1-Sn are shown in blue

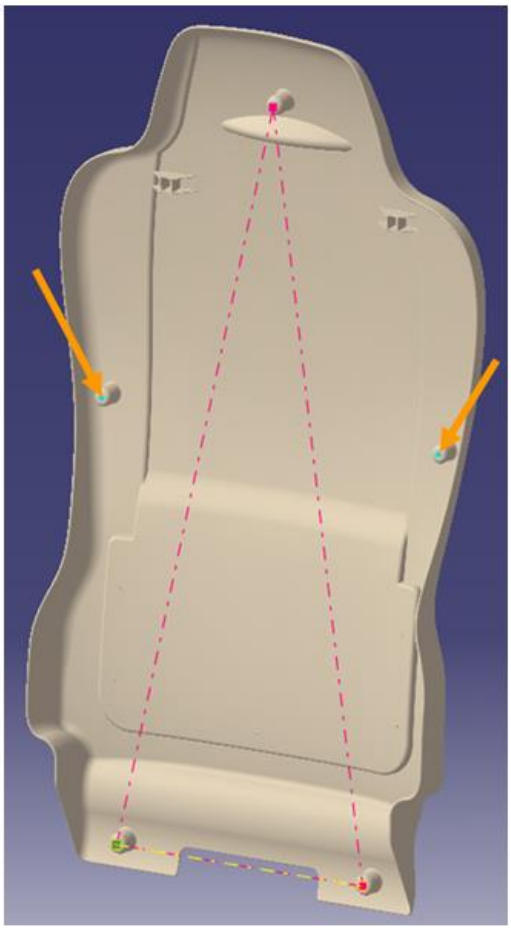

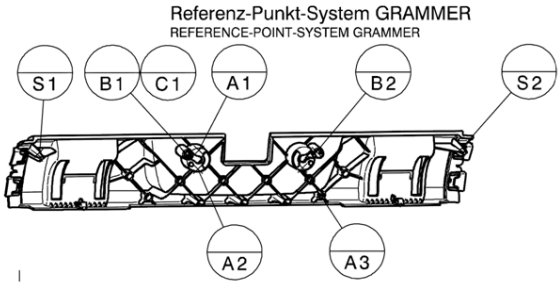

3.5.4.1 Dimensioning of non-rigid parts

See DIN ISO 10579 (dimensioning and tolerancing of non-rigid parts)

3.6 Decision criteria for positioning the RPS points

The RPS points should be accessible / measurable *as easily* as possible.
As far as technically possible, *create* mesh-parallel auxiliary surfaces, *sprue or holes where the RPS are located.*

Please observe the influence of production: Avoid the areas of sliders, parting planes, ejectors etc.
Do not place RPS points too close to the edges of components (influence of the burr etc.), bending edges (influence of radius, deformation), *otherwise there might be a* negative impact on alignment and decreased repeating accuracy of measurement.

RPS points and their incorporating geometries should be "parallel to the mesh". This means that the points and thus *the RPS planes should be parallel to the reference planes*. If the RPS points would result in "inclined" planes: see chapter 3.7.1.

Mesh-parallel receiving surfaces (“tiers, folds” etc.) for RPS points should be integrated except that relation benefit - cost is not o.k. or design problems are indicated.

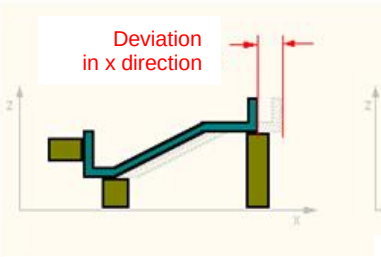

The deviation in x direction can be measured unambiguously here.

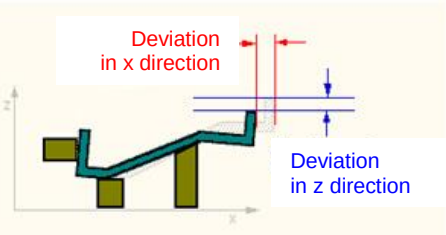

The inclined position leads to incorrect measuring results with the corresponding consequences.

These 3 positions are fixing the component in z direction. They are mesh-parallel.

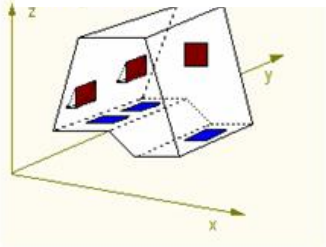

3.7 RPS planes in the drawing

Derived from the RPS points in the SP, the RPS planes are shown in the drawing. In each view of the drawing (axonometric views excluded), two planes have to be named.
At the beginning of the drawing preparation, the planes *were created*, even before the first dimension is drawn -> *this* facilitates *the* correct implementation of the functional dimensioning regarding the tolerance / functional chain.

The planes A/B/C are reserved for RPS in the drawing, other auxiliary planes start from "D" onwards.
For the designation of the reference in the drawing see *DIN EN ISO 5459-2013*.

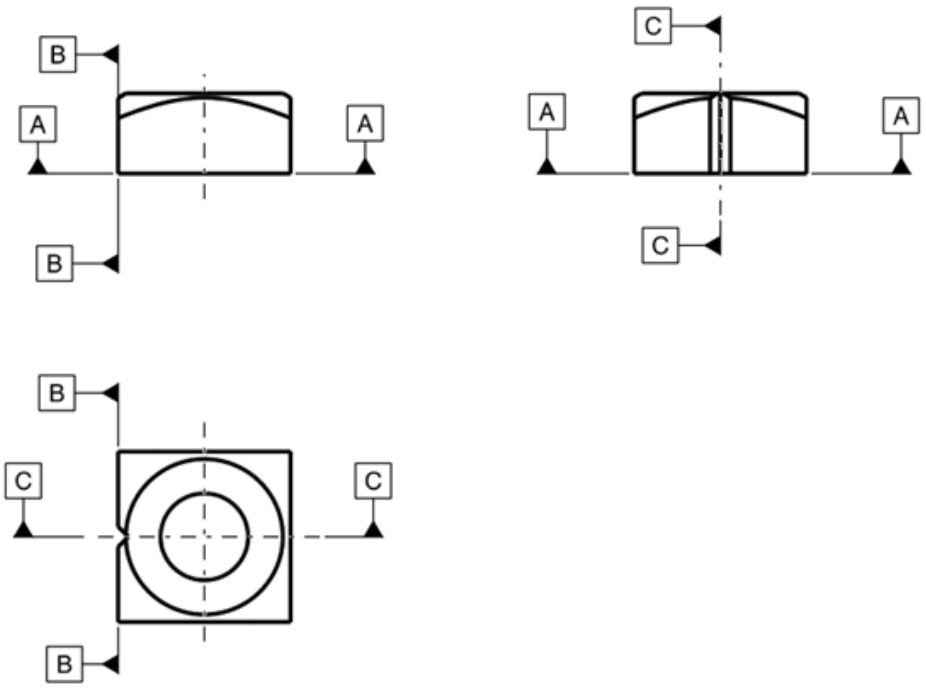

3.7.1 Alignment of RPS planes in the drawing which are not "mesh-parallel" in their installation position

For some SP, *it is possible that an inclination to the "mesh-parallelism" respectively in the drawing view* would develop due to the position of the RPS points. *In this case it is possible* to manage *this issue creating* so-called auxiliary RPS points (e.g. A1*, B2* etc.) into the SP.

The *basic rule is* to ensure that the mesh-parallel planes A/B/C are formed by the RPS points A1-A3, B1-B2 and C1. The auxiliary RPS points are drawn to "their" RPS point with theoretically precise dimensions *projected perpendicular to the reference plane*, e.g. A1* to A1, B2* to B2 etc.

The auxiliary points in the SP are generated by copying and renaming in the RPS folder of the SP.

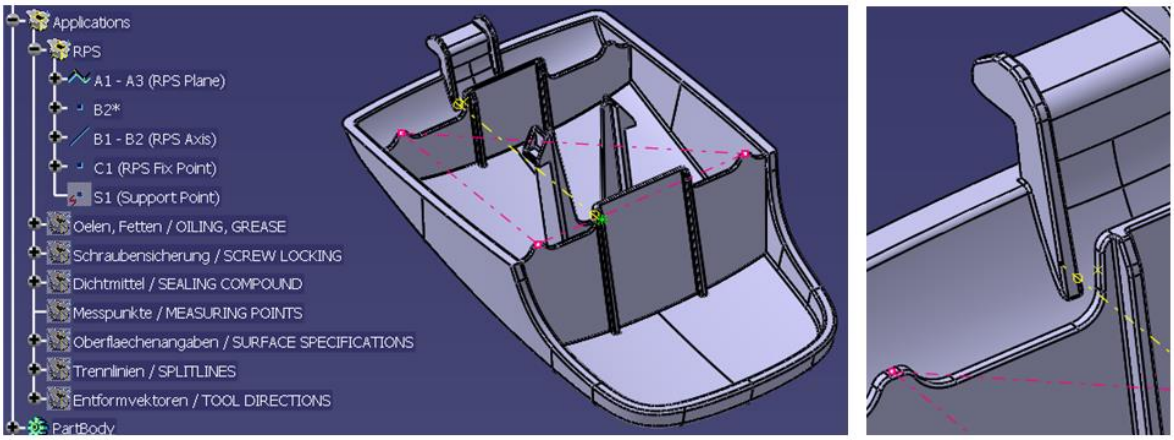

See drawing 1235628_RPS

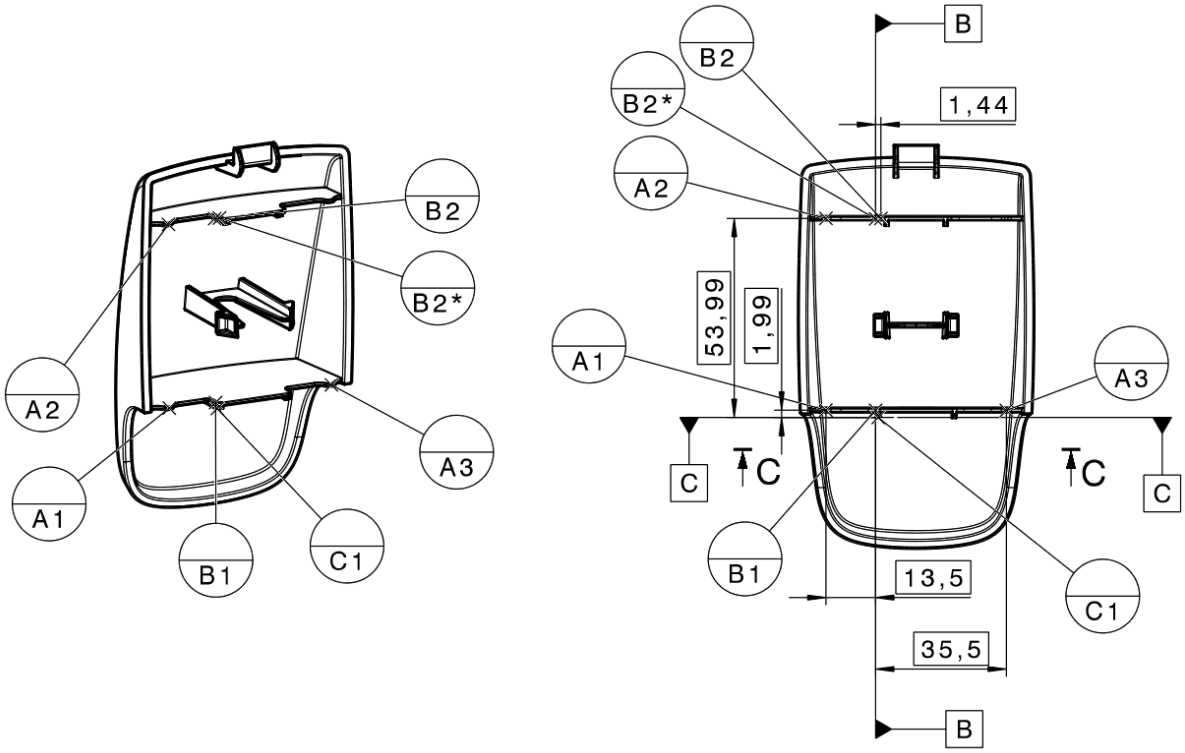

3.8 RPS points in the drawing

In the axonometric view, all 6 RPS points are shown. Here, the alignment of the SP in the axonometric view has to be selected in such a way that as many points as possible of the 6 RPS points can be seen on the surface of the SP. Additionally, the text "Reference Point System GRAMMER" from the drawing catalogue will be inserted into the axonometric view.

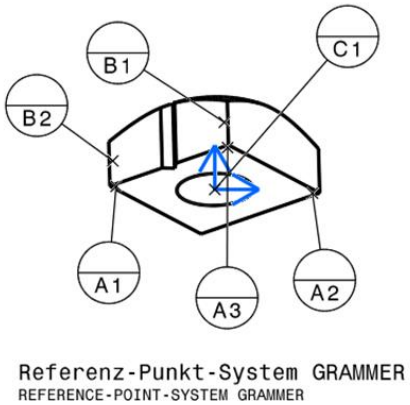

In the individual views, the RPS points will be inserted into the drawing at the discretion of the person in charge of the components: "as much as necessary, as little as possible".
The objective is to ensure that the drawing is as clearly arranged and as self-explanatory as possible. The RPS points and thus the technical interfaces have to be unambiguously distinguishable and comprehensible for the user of the drawing.
If the RPS points are not defined by means of unambiguous geometric layers (centre circle, corner etc.), the RPS points have to be dimensioned with "theoretical *exact dimensions*" (dimensions with *angular frame*). The purpose of this is i.a. to be able *to position* SP unambiguously and with *repeatable accuracy for measurement.*

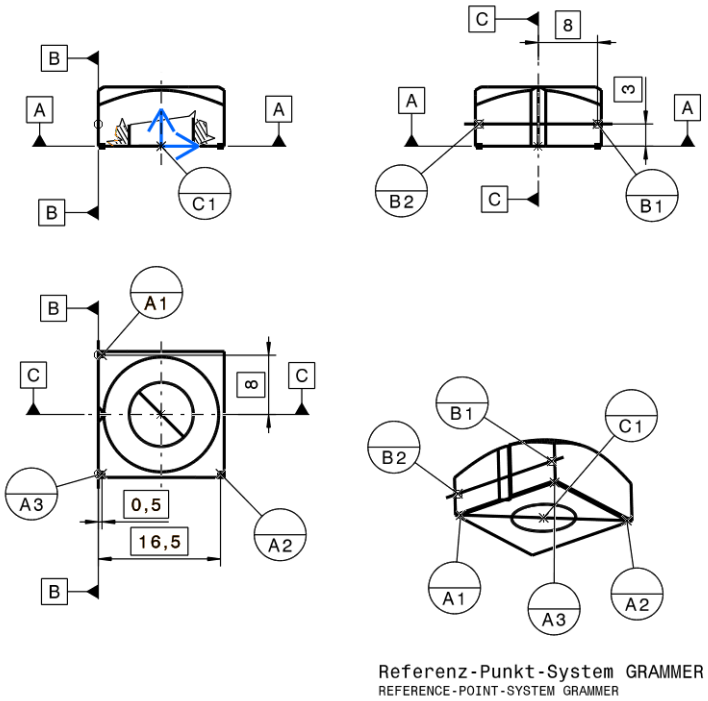

3.8.1 Symbols for the RPS in the drawing

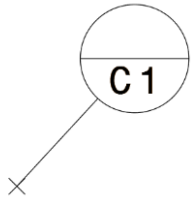

*The text height of the RPS balls is in all drawing sizes (DIN A4 – DIN A0) is **3,5 mm**.*

The RPS points must be placed on the 3D part. The positions in the derived drawing must match them.

***Tip 1:** Set the RPS Points in the 3D part for the drawing execution in "show" modus.*

***Tip 2:** Display the views in the drawing with "3D colors". This makes it easier to assign levels.*

Depending on their function, RPS points can be extended with reference surfaces (*see DIN EN ISO 5459-2013*), if the interface between the alignment provider and the alignment recipient is designed accordingly (see figure in chapter 3.4 or VA0060899).

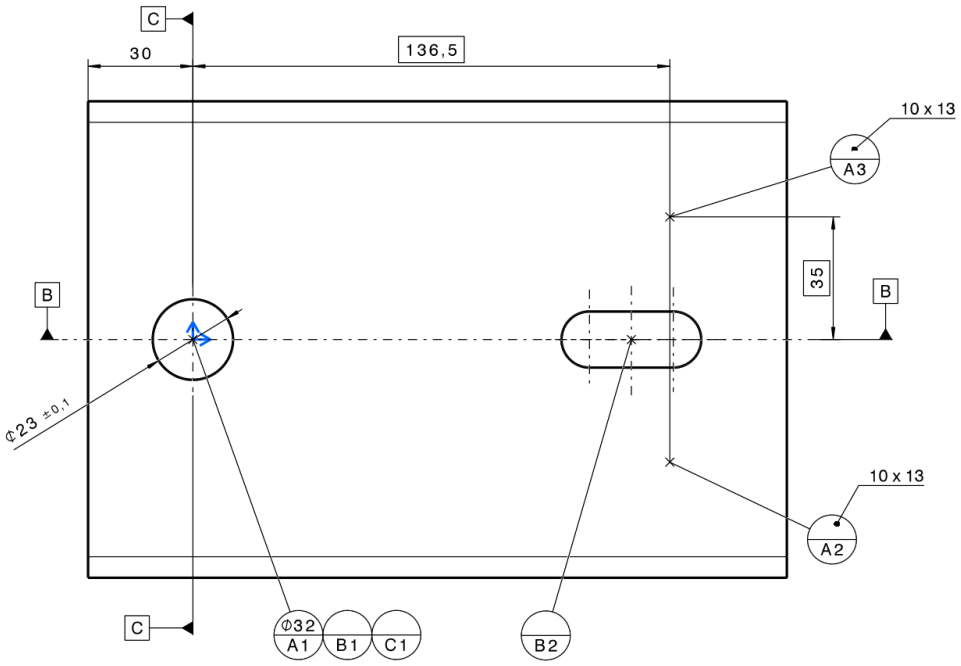

3.9 Functional dimensioning based on RPS

The functional dimensions are inserted based on the RPS planes (A/B/C) in the views of the drawing. This *should* be done in terms of the tolerance / functional chain. In this context, for each dimensioning the following question will arise: *The function has a functional relationship to which interface/RPS plane* (drill hole, notch, bending edge etc.)?

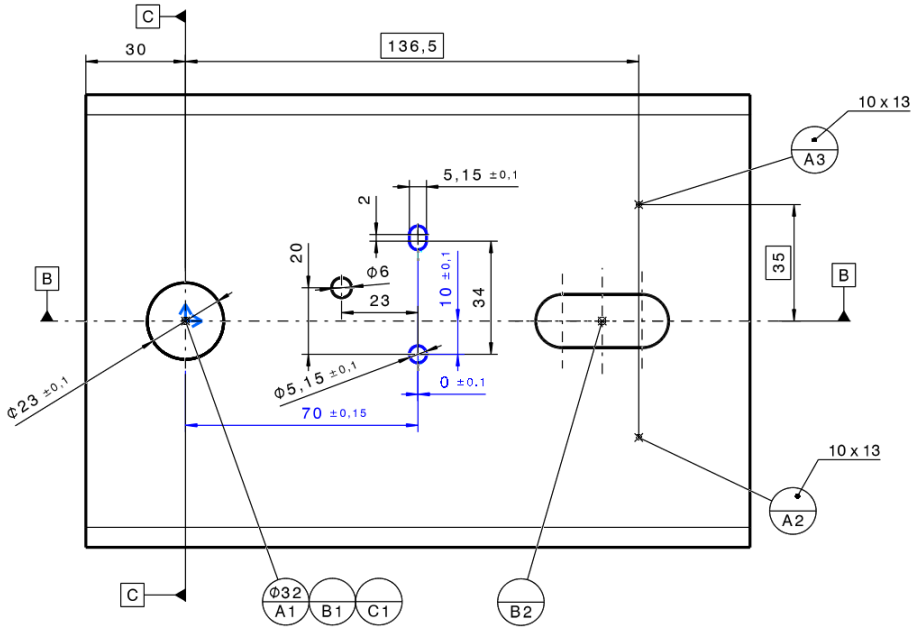

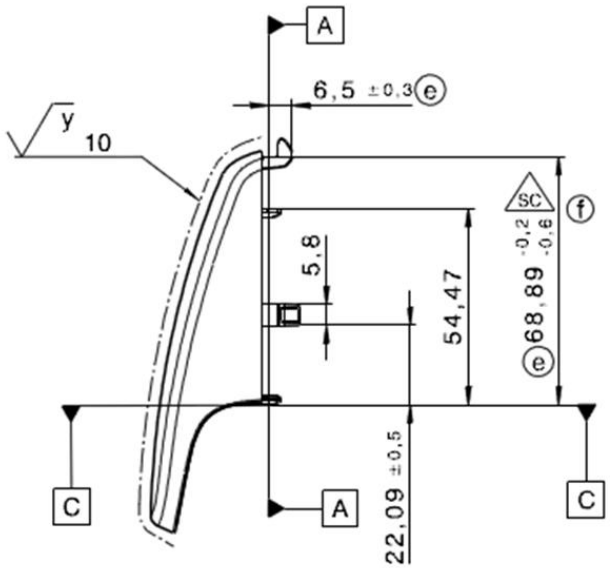

Of course, further dimensions can be drawn to the corresponding references.
For example, screw positioning *hole pattern* for another connecting part: The first drill hole is dimensioned with regard to the RPS ("functional chain"), the other drill holes of the interface refer to the first drill hole of the interface (= alignment provider for another component in the tolerance / functional chain).

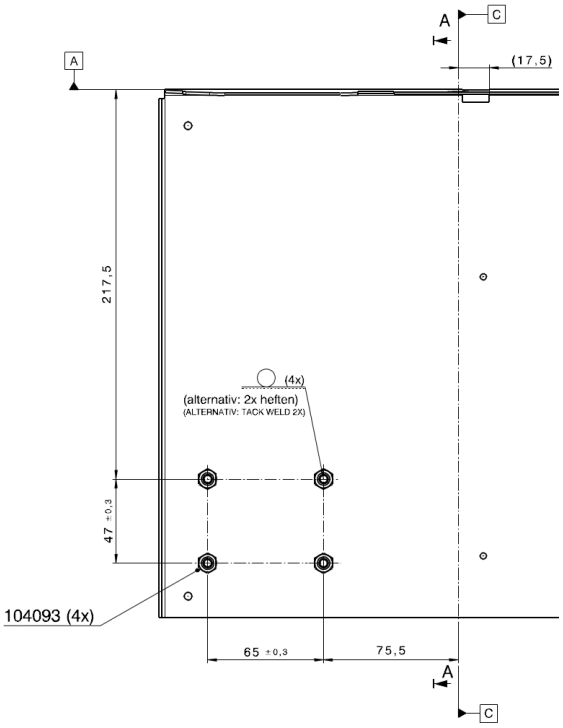

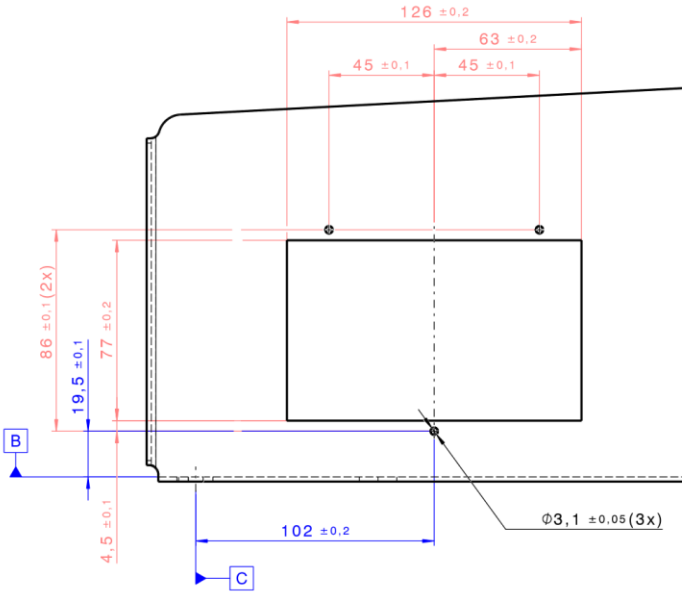

4 Examples of assemblies with RPS

VA0060899

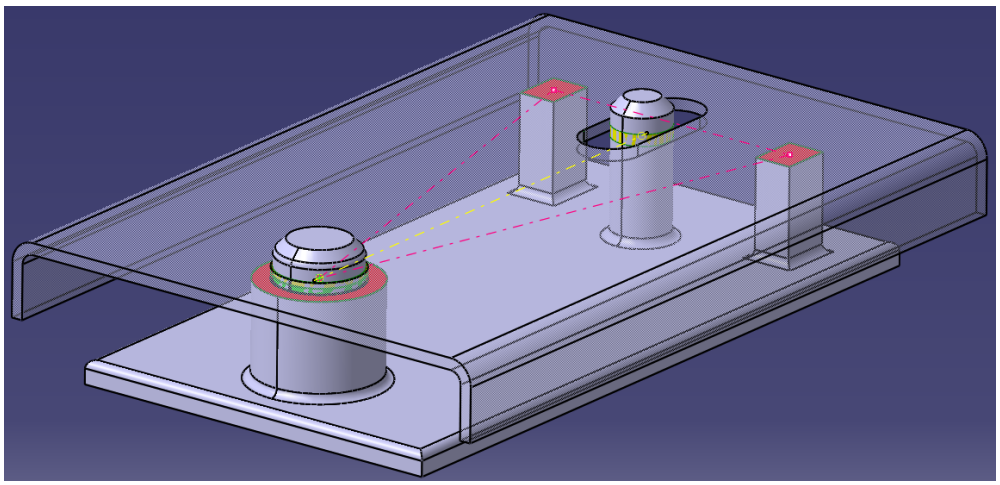

1175946

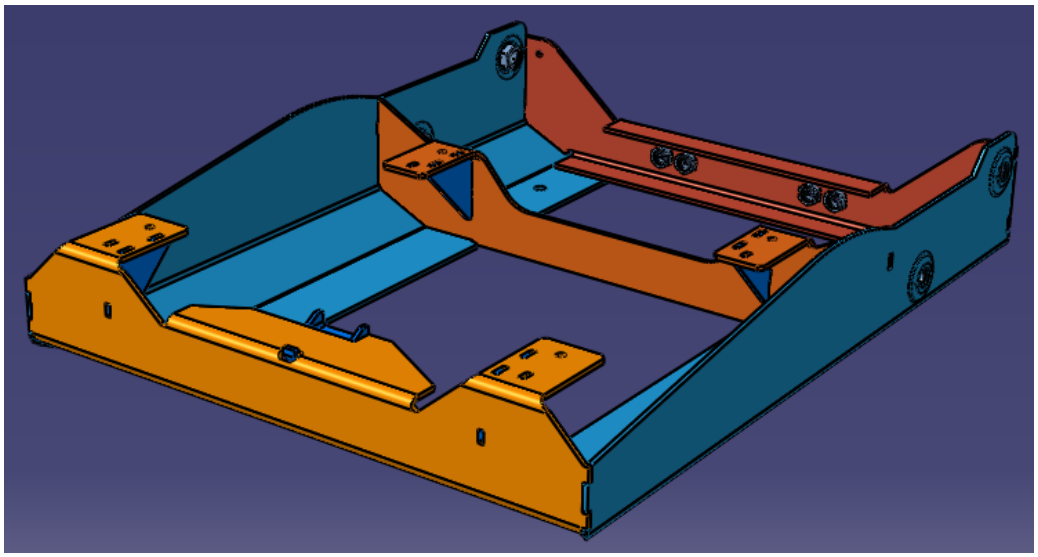

VA0060620

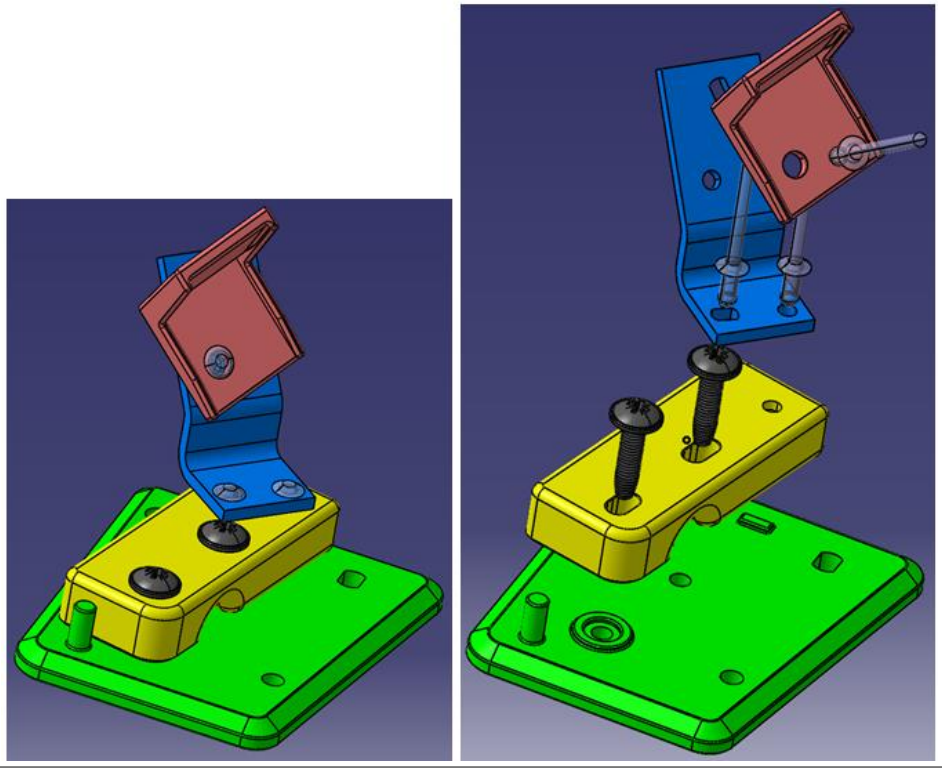

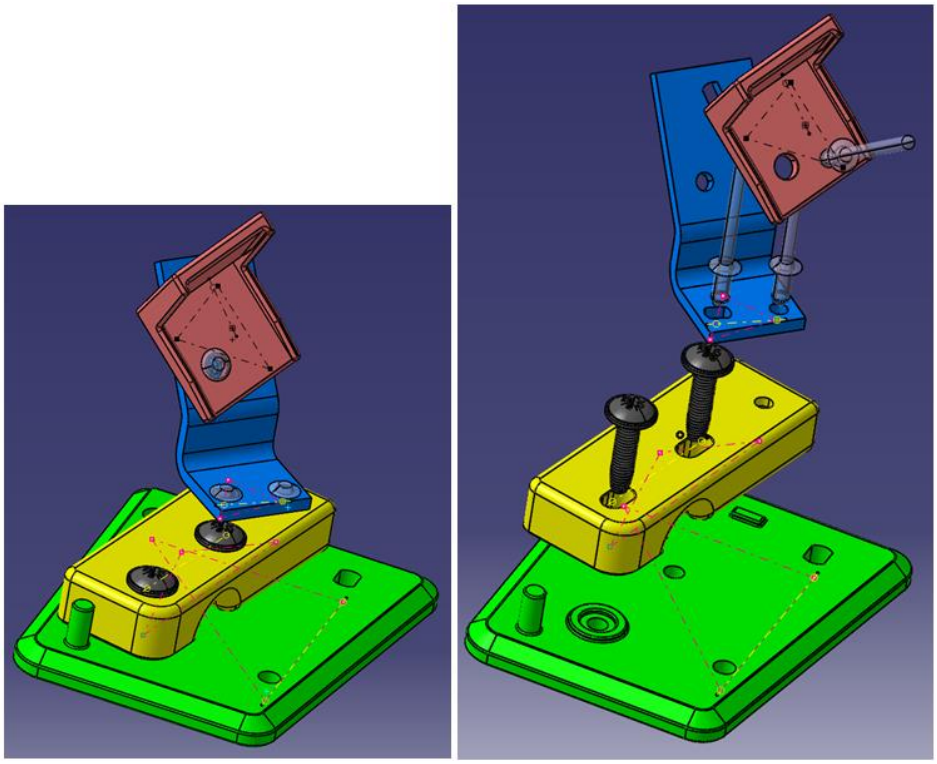

5 GRAMMER Reference Point (GRP) for seats etc.

As far as possible (to be agreed with the customer, if required), the GRAMMER REFERENCE POINT (GRP) shall be integrated in complete seats.
The GRP can always be integrated into the SP of the complete seat.
Whether the GRP can also be used in the quotation drawing, has to be clarified (with the customer) for the particular case.
The GRP serves as a reference for internal measurements and can also serve as an interface to the customer (GRP in the data model for the customer etc.).

Ideally, the GRP is integrated at the suspension lower part with "hole - longitudinal hole". If no suspension lower part (sheet metal) is available (e.g. open frame), the GRP shall be positioned at the front left of the bottom of the suspension frame or at the front left of the bottom of the adjusting rail.
For recurring measurements, a measuring equipment can be used which can take up the complete seat.

MSG65
1 071 205

GRP

suspension lower part
1 112 163

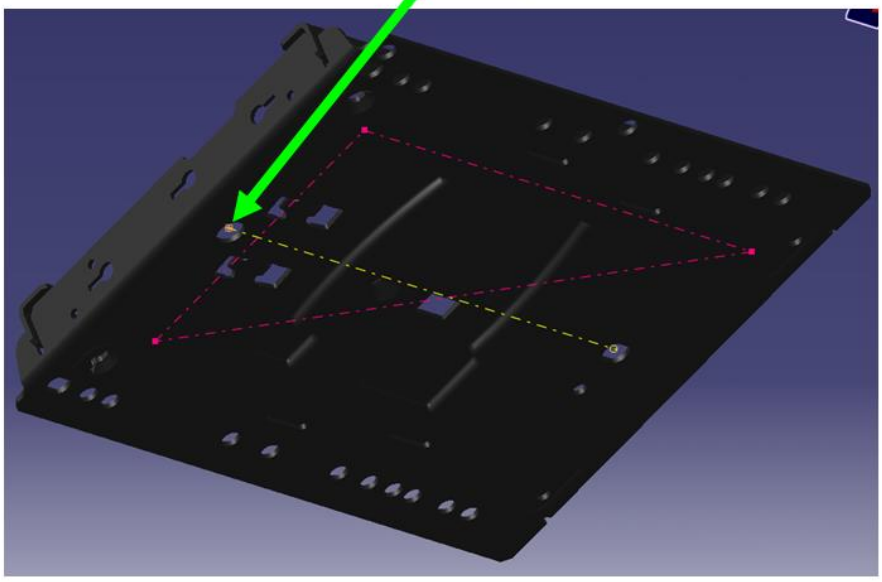

VA0069177

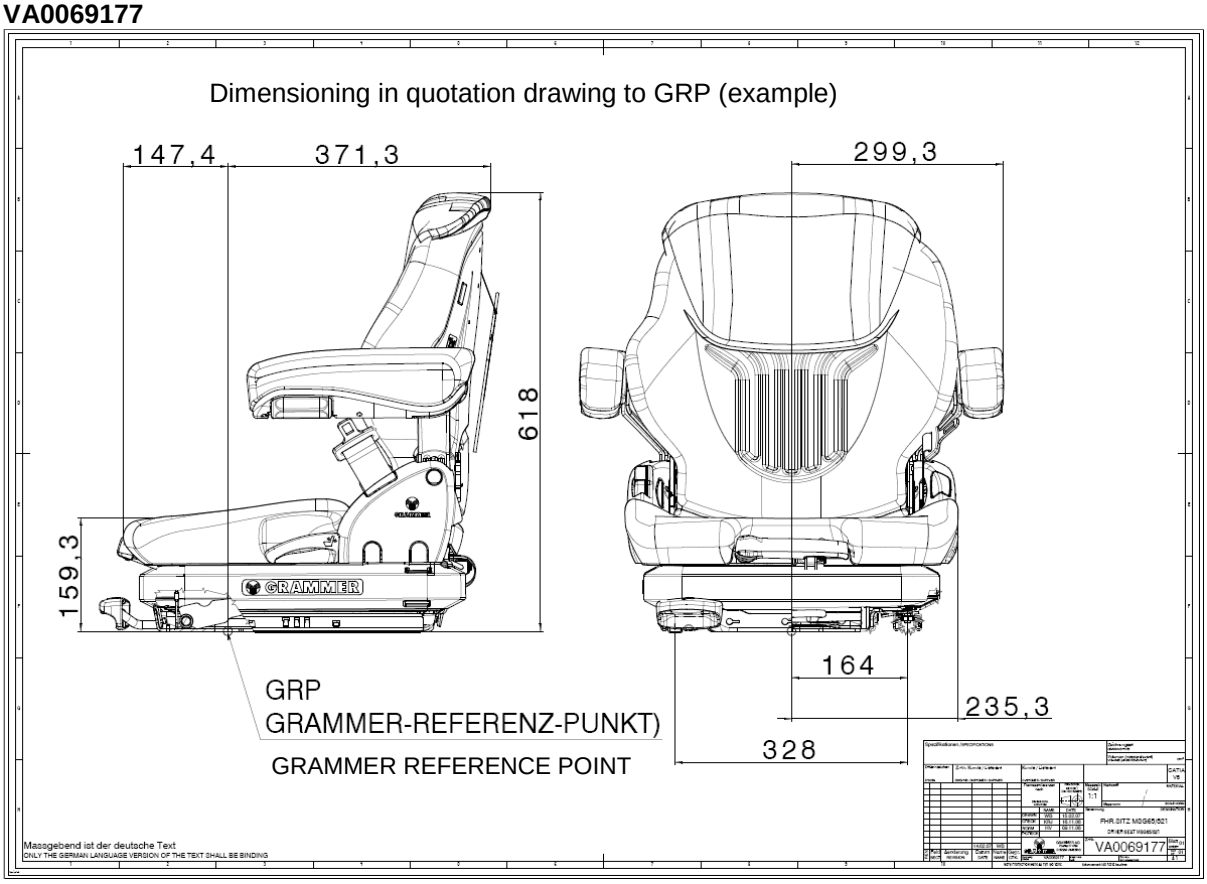
Dimensioning in quotation drawing to GRP (example)
147,4
371,3
299,3
618
159,3
164
235,3
328
GRP
GRAMMER-REFERENZ-PUNKT)
GRAMMER REFERENCE POINT
Massgebend ist der deutsche Text
ONLY THE GERMAN LANGUAGE VERSION OF THE TEXT SHALL BE BINDING
VA0069177

6 Notes on the application of the "RPS philosophy" in the SP (design in the CAD system)

It is recommended to design the SP on the basis of the RPS planes and to build - as already mentioned - the functional and tolerance chains upon one another accordingly (from the alignment provider (RPS plane) to the next function or interface etc.).
Where possible, the RPS points should be designed "physically" in the SP (as drill hole, longitudinal hole, tier etc.). This also facilitates the use of measuring equipment, alignment concepts in other process steps, maybe assembly etc.
The B1-B2 design is recommended as "hole - longitudinal hole" concept (see also VA0060870 / VA0060620) so that the alignment is less susceptible to tolerances. Of course, it is helpful to combine (A1) / B1 and C1 in this drill hole as far as technically possible.

7 Person in charge of the RPS tool

Please refer to the intranet.

8 Purchased parts with RPS

The objective is to have purchased parts be designed according to the principles of the GRAMMER Reference Point System as well. The supplier is requested to implement the RPS according this manual.

9 Demo programme "VW" with explanations and sample exercises

The demo programme "VW" with explanations and sample exercises regarding RPS is available in the “catiastart” folder.

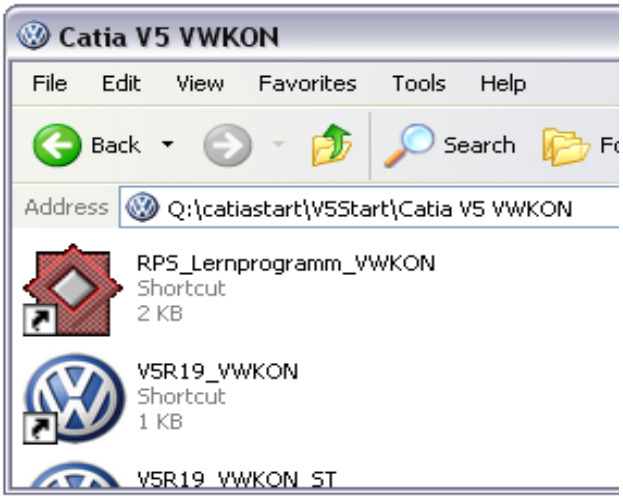

10 Design of the SP in tolerance centre position

During preparation, the individual parts are drawn in tolerance centre position (e.g. 10.5 +- 0.1).
Unilateral tolerances (e.g. 7 - 0.15) are not admissible.
Exceptions are ISO fits, standard parts etc.
Otherwise, the parts would be presented in a "distorted" way in the CAD system. Functional check, *space control* etc.
For subsequent modifications of the part drawings to the ISR etc. unilateral tolerance positions are admissable.

11 Cited standards / related standards

DIN 406-10 (Dimensioning / concepts and general principles)

DIN EN ISO 1101 (Geometrical Product Specifications)

DIN EN ISO 5459-2013 (Geometrical product specifications (GPS)

VW standard "Reference Point System - RPS": VW 010 55 (available in the SAP system)

BMW: FMK (Funktionsmaßkonzept / BMW N 113 32.0 Part 6)

DIN ISO 10579 (dimensioning and tolerancing of non-rigid parts)

12 Why RPS? The pros and cons

12.1 Advantages of using RPS

- reasonable and self-explanatory functional dimensioning
- tolerance chains / tolerance analyses can be derived easily (effective tolerance chains are only possible by means of a consistent reference system)
- tolerance / functional chain is considerably shorter and thus less vulnerable when using RPS -> better product and better process, because there are less "contributors" regarding tolerances
- influence of the individual parts is unambiguously distinguishable (welding calibre, assembly etc.) when they are assembled
- in case of optimum application, the individual part indicates the tolerance for the final part in welding assemblies, influence of welding calibre / decline of the welding seam is reduced or eliminated (-> better process)
- reference to and consistency regarding the "geometrical tolerances" standard
- same alignment for measurement at the supplier's and GRAMMER (= better and more comparable results of the ISR, because the basis for measurement is the same) = assurance of identical measuring references
- same *(base-) alignment for construction (toleration, tolerance chains),* alignment for production (welding calibre, tool holders and measuring equipment)
- positive influence on assembly / ease of assembly; less influence of the worker on the assembly position in case of proper application of RPS
- in case of reasonable application of RPS, components can be joined without additional tools (e.g. calibres)
- allows better coordination regarding functions and requirements between development department and tool manufacturing department (punching, welding etc.) as well as the supplier
- joints and gaps can be determined more precisely, if required (important for the customer's joint plan)
- comprehensive tolerance chains, "instable" alignments (negative influence on tolerance chains) are recognized early

12.2 Disadvantages of using RPS

- training effort, "initial difficulties" and discussions until implementation
- effort regarding the definition of RPS points in the SP / presentation in the drawing
- in exceptional cases, possibly more effort for development or tool costs ("mesh parallelism", tiers etc.)

13 Miscellaneous

13.1 Programme for reading out the RPS points in a table

Starting the tool "RPS_FEATURE" in Catia:

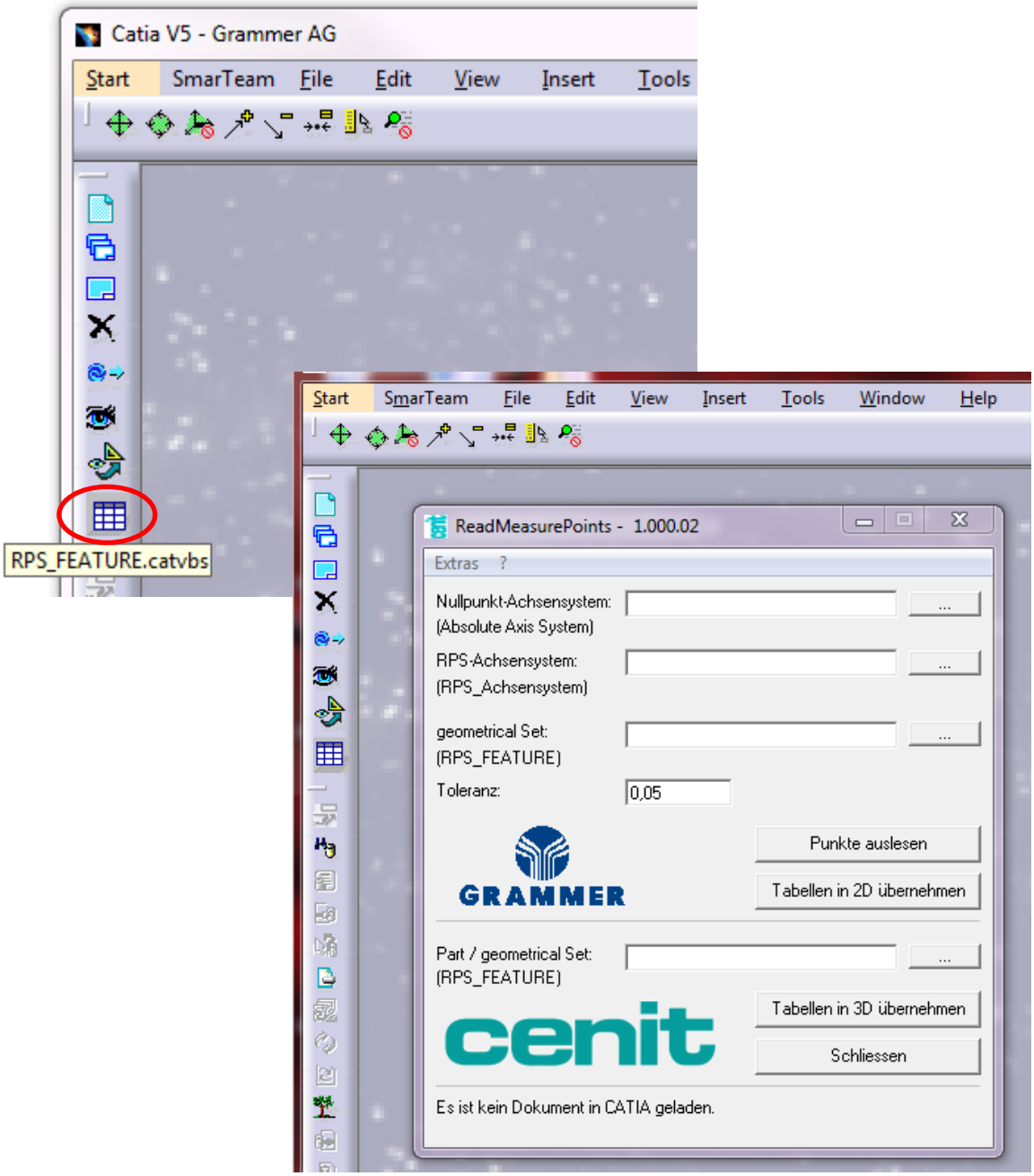

Contact person: Spielmann Sven

Training material: see **Q:\catiastart\APPS\ReadMeasurePoints\Help**

13.2 Auxiliary tables in the drawing

For internal welding assemblies, auxiliary tables can be inserted supportively into the drawing. The auxiliary table is initiated by the process chain in coordination with the metrology and development departments, if it is important for monitoring the process.
By means of the values measured, processes (welding etc.) can be better monitored and corrected. The measuring points determined by metrology can be visualised in the CAD system and can be used for analyses or as basic information for tool corrections, if necessary.
See drawing 1211815_RPS.

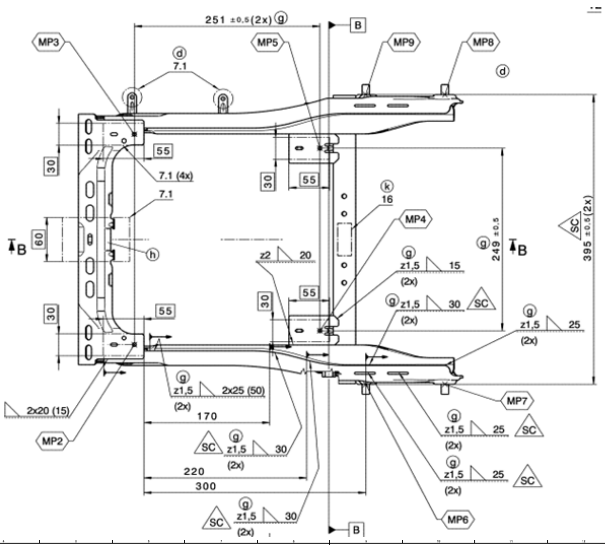

Messpunkt MEASURING POINT	X	Tol.X	Y	Tol.Y	Z	Tol.Z
MP1	322,884	-	299,5	-	8,65	±0,9
MP2	263	-	10,5	±0,3	63,55	±0,65
MP3	263	-	-276,5	-	63,55	±0,65
MP4	12	±0,5	-8,5	±0,3	42,5	±0,5
MP5	12	±0,5	-257,5	-	42,5	±0,5
MP6	-50	±0,3	64,5	±0,5	15	±0,4
MP7	-157	±0,4	64,5	±0,5	52	±0,6
MP8	-157	±0,4	-330,5	-	52	±0,6
MP9	-50	±0,3	-330,5	-	15	±0,4

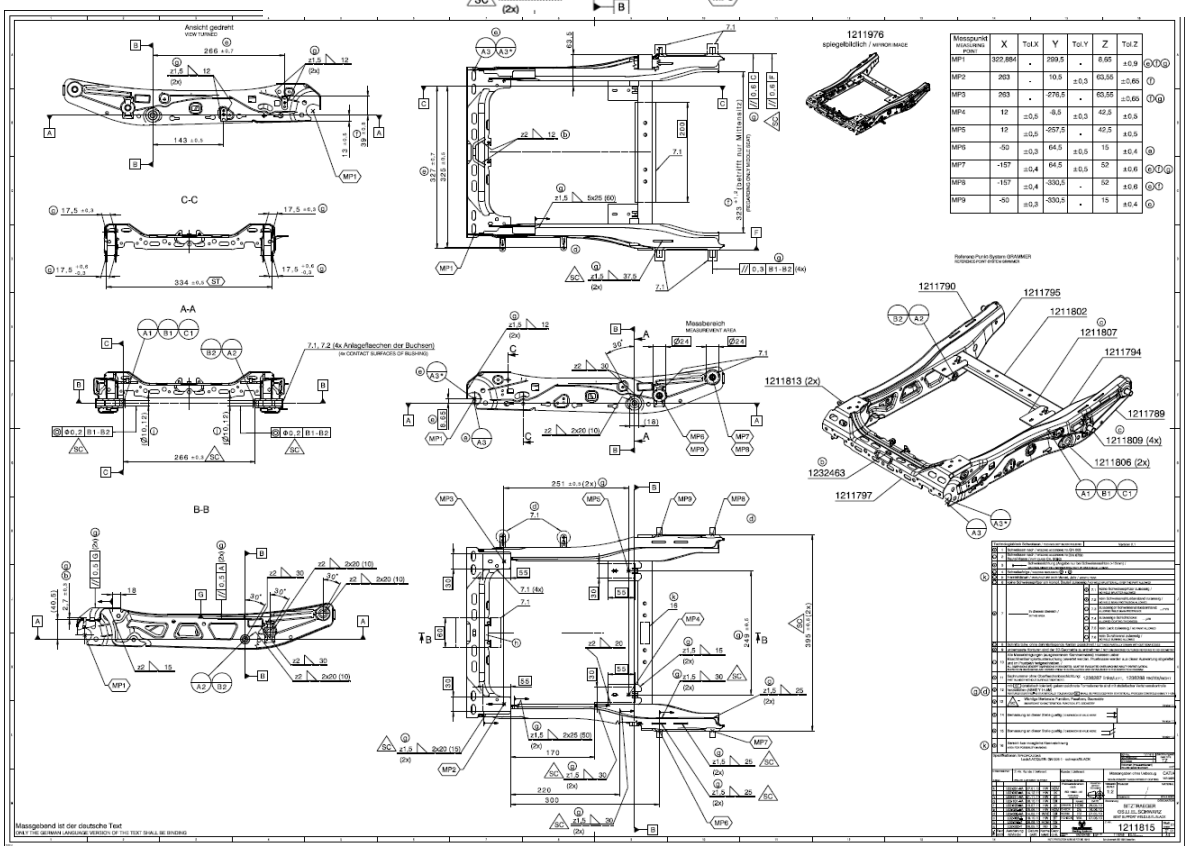

13.3 Tolerance chain tools / based on “Excel”

13.3.1 Tool for statistical tolerance chain / “Excel”

The tolerance chain tool (one-dimensional / Excel / with influence of statistics) based on RPS alignment, developed by Andreas Pöhlmann, is available at GBS as Form
“F_015_018_Statistische_Toleranzanalyse_STATISTICAL_TOLERANCE_ANALYSIS”.

13.3.2 Tool for tolerance chain Automotive / “Excel”

The tolerance chain tool (Excel / Automotive) is available at GBS as Form
“F_015_019_Toleranzanalyse_Kurz_Tolerance_Analysis_Short”.

13.4 VW customer standard regarding the application of the "Reference Point System"

VW 01055 (standard is available in the SAP system)

14 Applicable Documents

Statistische Toleranzanalyse / STATISTICAL TOLERANCE ANALYSIS	F_015_018
Toleranzanalyse Kurz / Tolerance Analysis Short	F_015_019
Reference Point System GRAMMER (RPS)	W_015_002

15 Changes

04/2018
Item 3.1
Item 3.2
Item 3.4
Item 3.5
Item 3.7.1
Item 3.8.1
Item 11
Item12.1
Item 13.1
Item13.4 deleted
Item 3.1; 3.4; 3.5; 3.5.1; 3.5.2; 3.5.3; 3.6; 3.7; 3.7.1; 3.8; 3.8.1; 3.9; 10 English translation changed.