Training document

015 PLM

Mounting Drawing

Requirements for drawing creation

T_015_006

Training document

Mounting Drawing

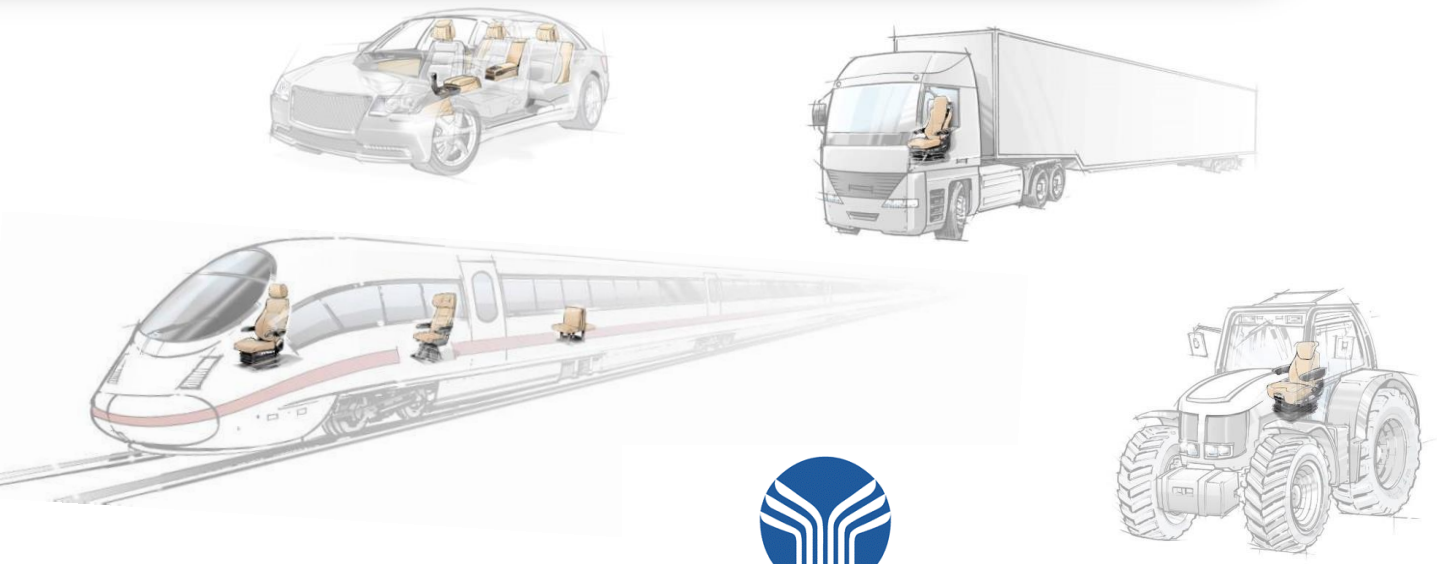

GRAMMER

Table of Contents

1 Specifications 4
2 Aims 4
3 Legal notices 4
4 Flow chart 5
5 Create assembly_MZ and scene 6
5.1 Description of the “Enhanced Scene” Toolbar 7
5.2 Creating an exploded view (moving components) 7
6 Basic settings of the mounting drawing 8
6.1 Change drawing standard 8
6.2 Filling the profile cart 9
6.3 Generating a drawing view 10
6.4 Changing the line widths 11
6.5 Line width / font size 11
6.6 Automatically generating of part numbers and axes 12
6.7 Drawing catalogue 13
7 Overview of different drawing executions 13
7.1 Mounting drawings 13
7.2 Collection drawings for mounting drawings 14
7.3 Functional Assembly Drawings 15
7.4 Collection drawing for functional assemblies 16
8 Other applicable documents 17
9 Amendments 17

1 Specifications

Upon entering into force, this training document shall replace all previously valid directives on this subject.
The following applies to the application of the new training document and the expiry of the previous directives:

- For “ongoing old projects”, the rules specifically defined for that project shall apply. If such rules are missing completely or in part, this work instruction shall apply where necessary.

- If there are definition gaps, in case of doubt the rules applicable up to now as well as implemented methods shall apply in these situations.

2 Aims

Definition of a uniform procedure regarding the preparation of mounting drawings (MZ) taking into account the following aspects:

- creating an enhanced scene (exploded view) as a template for the mounting drawing to be created afterwards
- basic settings of the drawing

Important functions	enhanced Scene
Components	An assembly is required.
Specific characteristics	none
Requirements	Basic knowledge of CATIA V5, preparation of drawings (Drafting) with CATIA V5

3 Legal notices

Copyright © Fa. GRAMMER AG

GRAMMER AG
Postfach 1454
D-92204 Amberg

Re-printing, reproduction and translation of this document, in full or in part, is not permitted without the written permission of GRAMMER AG.

Amberg, Februar 2019

4 Flow chart

Complete 3D model

3D_MZ model

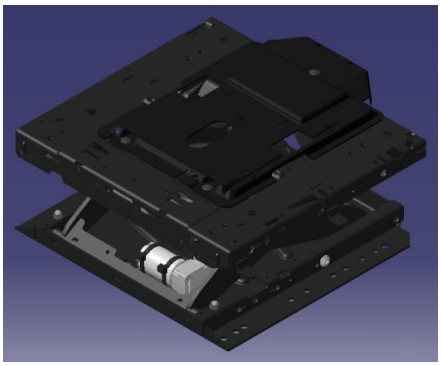

Scene – exploded view

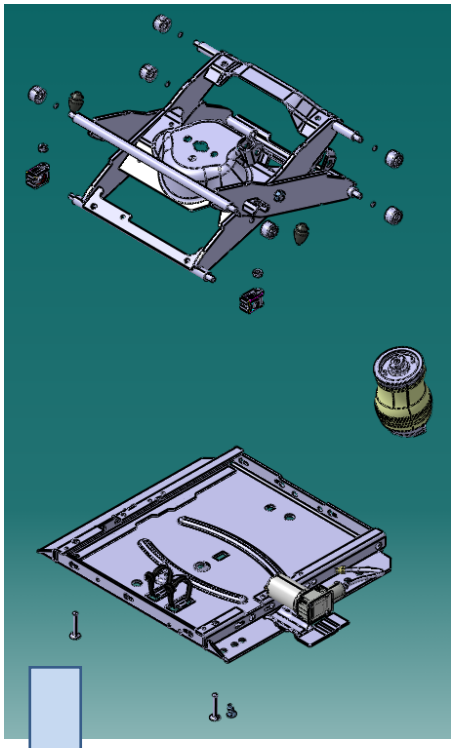

Drawing

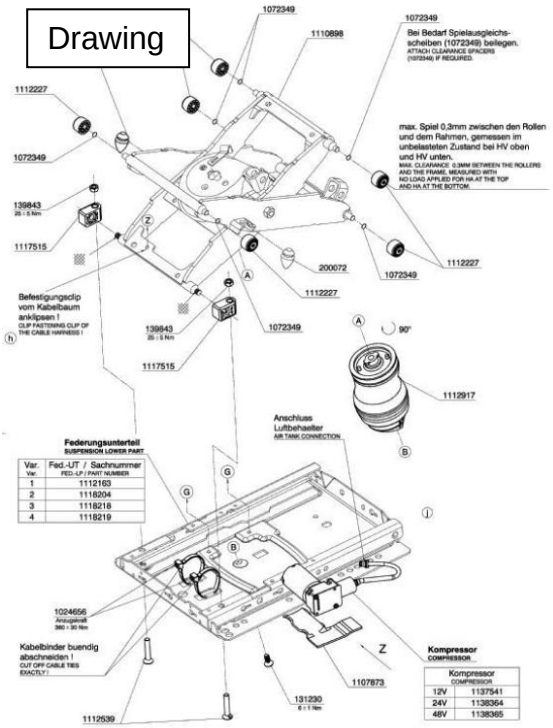

5 Create assembly_MZ and scene

Create a Functional Assembly FA_XXXXXXX (FA_seven digits part number) and insert all components to be assembled.

Create assembly XXXXXXX_MZ (seven digits part number_MZ).
All interface elements and the created functional assembly are inserted here.

An assembly XXXXXXX_MZ is created to accurately represent and explain the mounting position and ensuring assembly in the right place.

Create a scene with the bottom „Enhanced Scene“.
The name of the scene is automatically assigned in the new window. When deselecting, a name can be inserted manually. In Overload Mode, "Partial" have to be selected to allow replacement of components within the scene in the event of a change. With “Full”, the scene is not updated when changes are made to the assembly.

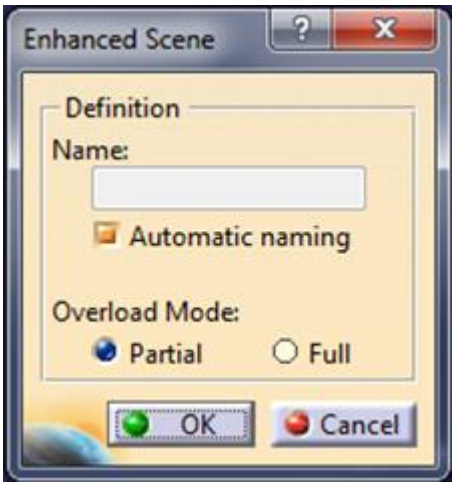

Confirm with OK to open the scene (recognizable by the green background). A new scene-specific toolbar appears:

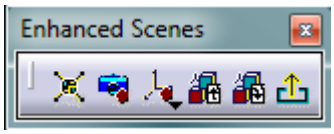

5.1 Description of the “Enhanced Scene” Toolbar

- „Explode“ Exploding an assembly in the scene.
  The changes will not influence the model.
- „Save Viewpoint“ Saving the view in the scene.
  Enable this function to display always the same view when activating the scene.
- „Apply Scene on Assembly“ The changes made in the scene will also be applied to the assembly.
- „Apply Assembly on Scene“ The changes made in the assembly will be applied to the scene. This also can be used to undo changes on the scene and to align them with the model.
- „Exit Scene“ Leave the scene.
  Select the scene in the structure tree to activate it again.

5.2 Creating an exploded view (moving components)

- Moving of components (rough positioning)
- Select the compass at the red point,
  drag it to the part and release it there.
- The compass is active when it is shown in green colour and one or more parts are selected.
  Only then it is possible to move the parts.
- It is possible to move several parts at the same time, if they are selected with the Ctrl key being pressed (in the tree diagram or in 3D).

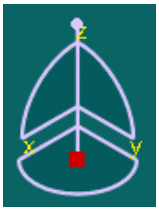

3D compass

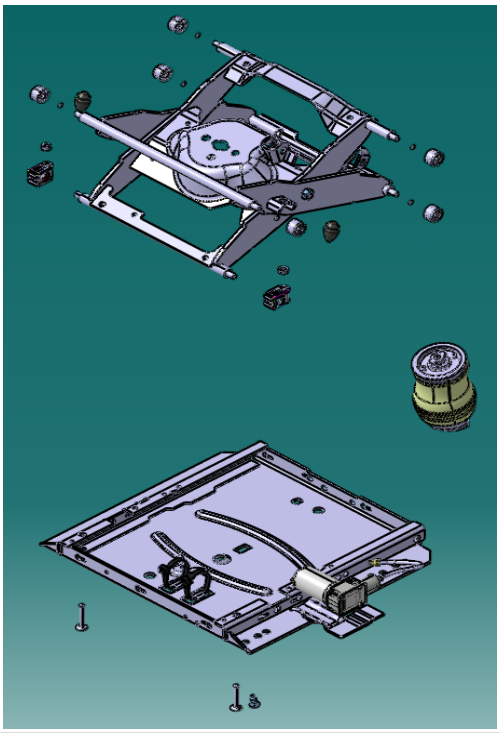

Components moved with the compass

6 Basic settings of the mounting drawing

6.1 Change drawing standard

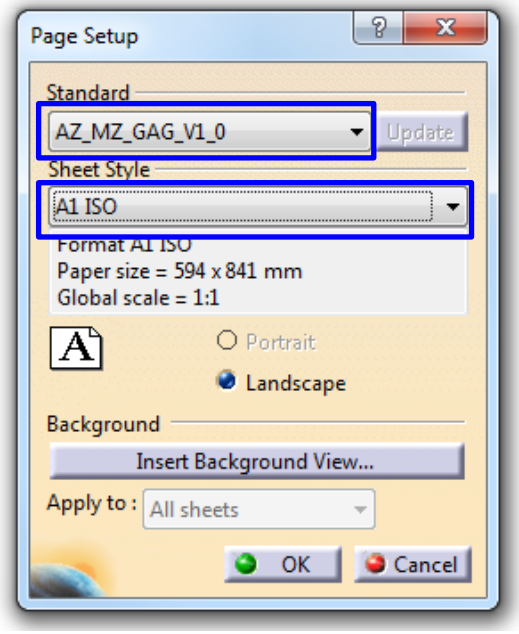

Choose the basic settings of the drawing below „File → Page Setup“. The drawing standard has to **AZ_MZ_GAG_V1_0**.
Once the appropriate sheet size has been determined, appropriate line thickness and text heights are available in this drawing standard.

6.2 Filling the profile cart

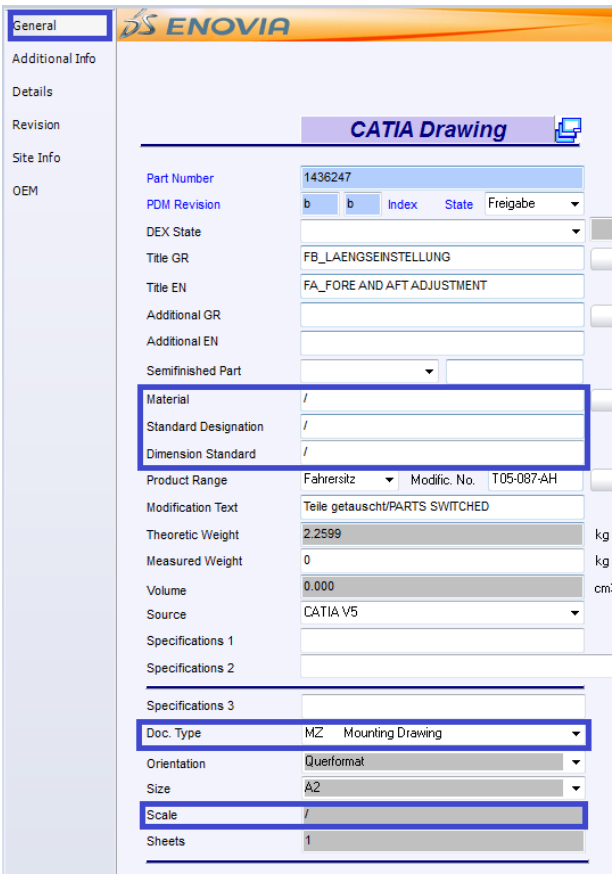

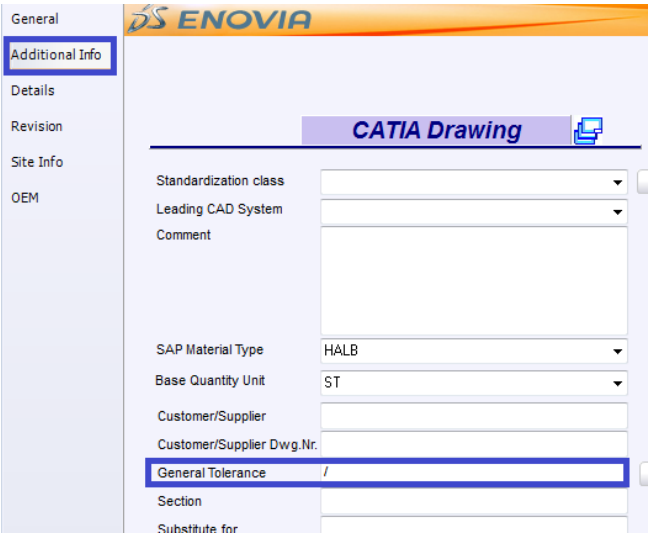

- Document type: MZ
- Material: /
- Scale: /
- Dimensional Variation /

With „Run Skript 01“ , the title block is automatically filled.

6.3 Generating a drawing view

- In the drawing, select Icon „Isometric View“ and then go to the assembly.
- Click on the scene and select below REF_XXXXXXX_MZ of the assembly the publication „Origin“.
- The scene is projected into the drawing.

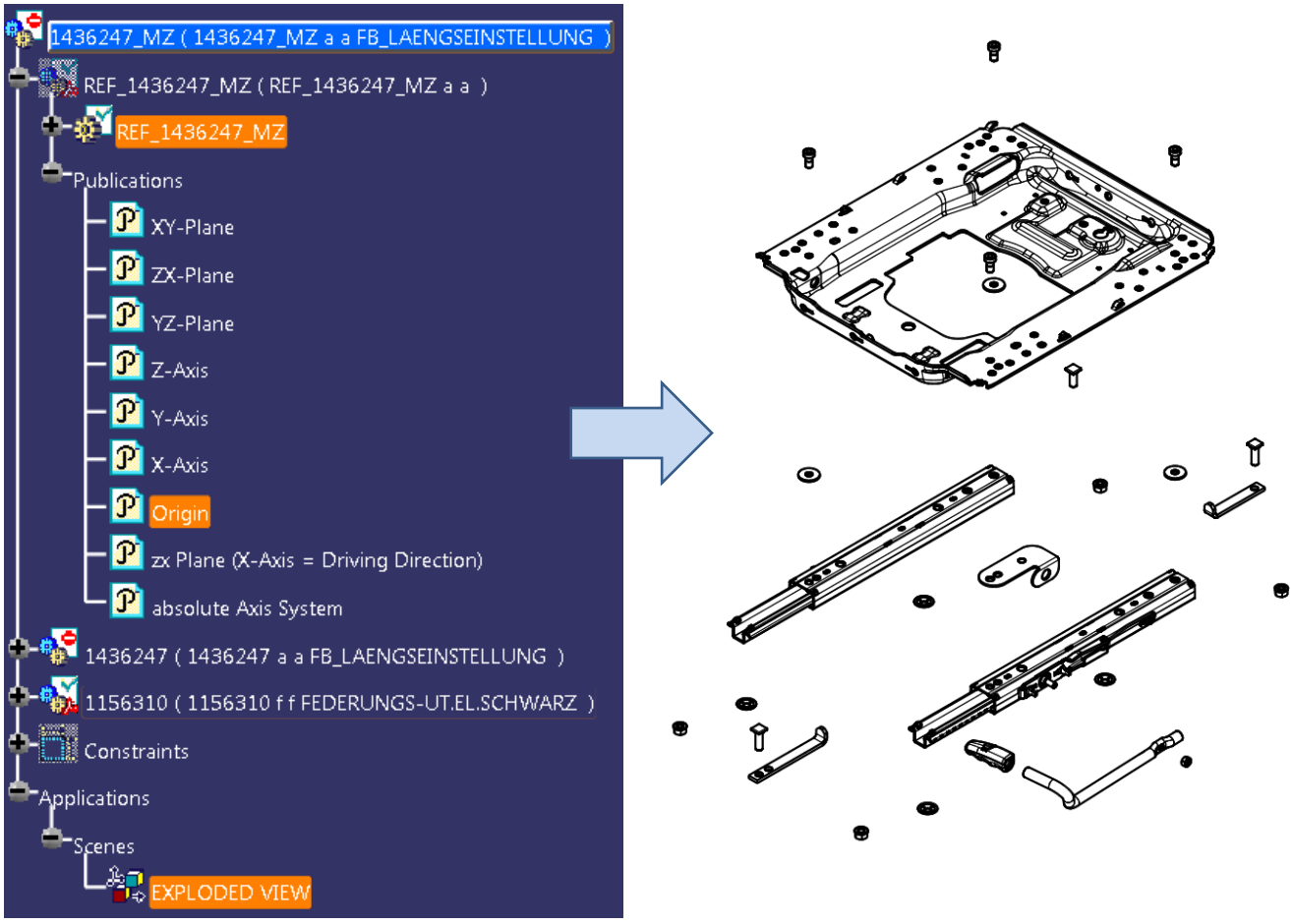

6.4 Changing the line widths

As besides the components also interface parts are displayed on mounting drawings, different line widths are used.

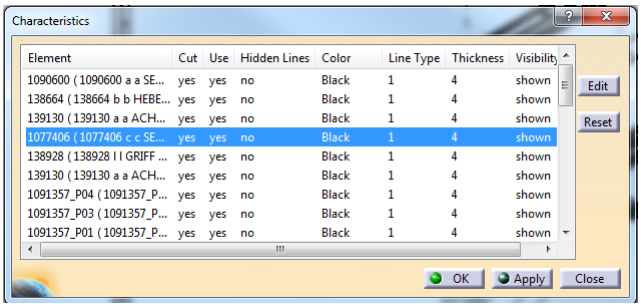

Activate the view frame, click the right mouse button at the frame, „ISO objekt → Overload Properties“. The „Characteristics” window opens.

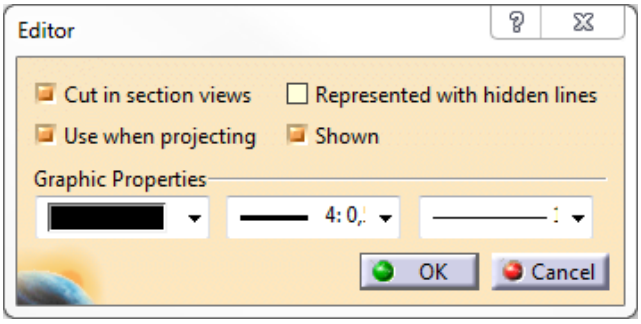

Select the parts to be modified in the drawing. Selected parts are displayed in the table, where they have to be selected once again.
Click the „Edit“ button to open the „Editor“ window, in which you can change the properties of the part.

6.5 Line width / font size

Line width:

Components	0.50 mm
Interface parts	0.18 mm
Axes	0.18 mm
Line type	4

Font size:

- Part number 5.0 mm
- Position number 7.0 mm
- Tightening torques 3.5 mm
- German text 5.0 mm
- English text 3.5 mm

Texts in drawings are displayed in German and English.
Their size remains the same irrespective of the frame used.

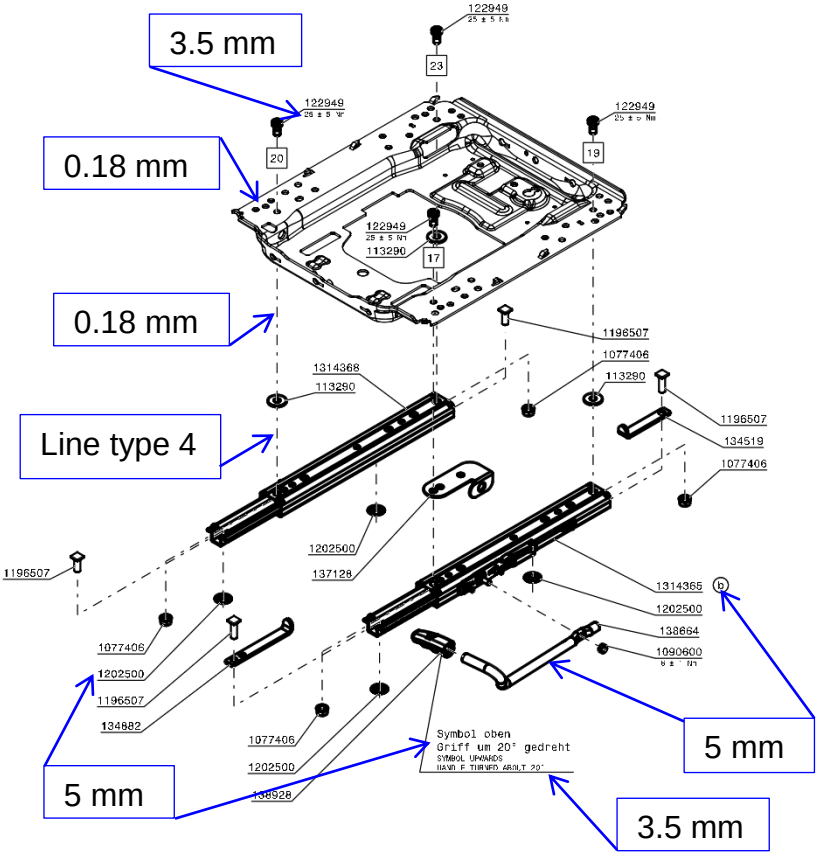

6.6 Automatically generating of part numbers and axes

The part numbers of the single parts are added automatically by means of the „Text Template Placement“ command.

A part number must be assigned to **each** part (at least with line). Tightening torques are written directly below the part number. For this reason, the tightening torque legend is omitted.

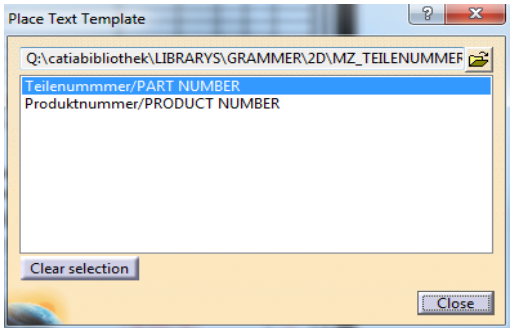

When using the first time, the text template catalogue is selected:

Q:\catiabibliothek\LIBRARYS\GRAMMER\2D\MZ_TEILENUMMER_ERZEUGEN.catalog

After clicking on a component, the selection of the part number and product number is displayed in the window. Always select the part number only! Make sure to select an edge of the part before, because it is not possible to select an area.
The command cannot be used for assemblies, as the assembly number must be insert manually.
The number is located above the reference line and ends without a symbol shape.

The axes are generated by means of the „Arrow“ command. So that the arrow becomes an axis, right-click a yellow square at the line, set ***No symbol*** for the "Symbol Shape" and set ***Line type 4*** in the lower bar.
The arrow is used to be able to add interruptions and breakpoints and to be able to easily modify the axis.

Before only a simple arrow:

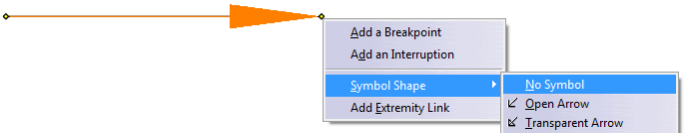

Afterwards axis with interruption and breakpoint:

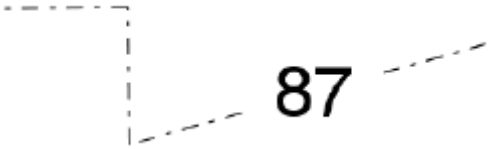

6.7 Drawing catalogue

It is possible to insert legends, symbols and texts from the “MZ” folder into a view.

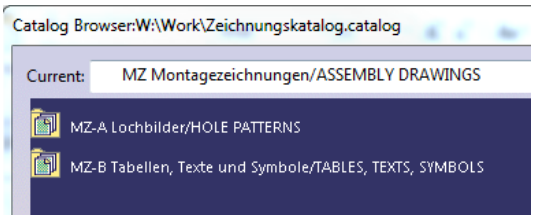

The following catalogue element has to be insert in a view in each mounting drawing and placed above the title block:

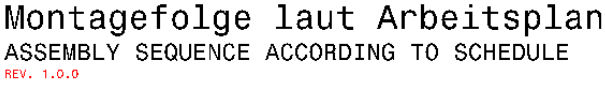

7 Overview of different drawing executions

7.1 Mounting drawings

are compilations of parts/assemblies as an installation help for production.

- Drawing number: 1234567
- Assembly number: 1234567_MZ
- Title: ……..
- Doc. Type: MZ
- SAP Material Type: ZCHN

Example number: 1431896

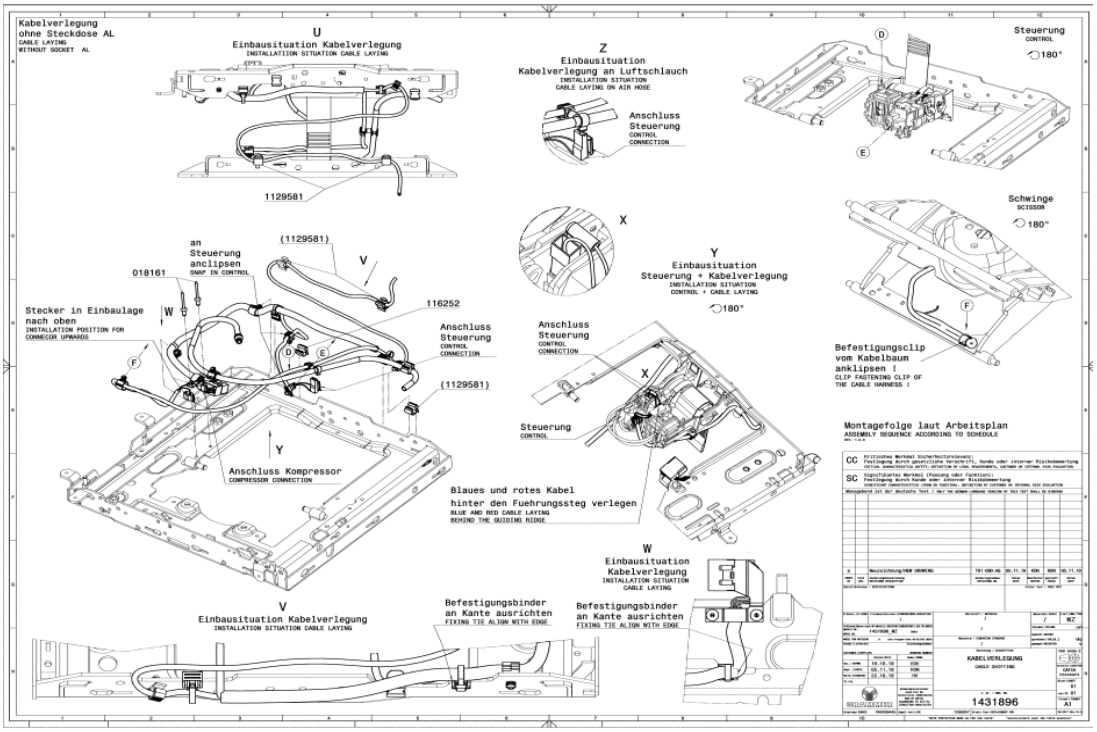

7.2 Collection drawings for mounting drawings

are collections of mounting drawing. The document type remains MZ, because no SZ can be used in production, because masks for MZ have been created in SAP. If required, a collection drawing object with the same number as the drawing (XXXXXXX_MZ) can be created. The rest of the object numbers are different to the drawing number.

- Drawing number: 1234567
- Assembly numbers: 1111111_MZ, 1111112_MZ, …
- Title: ……..
- Doc. Type: **MZ**
- SAP Material Type: ZCHN

Example number: 1199294

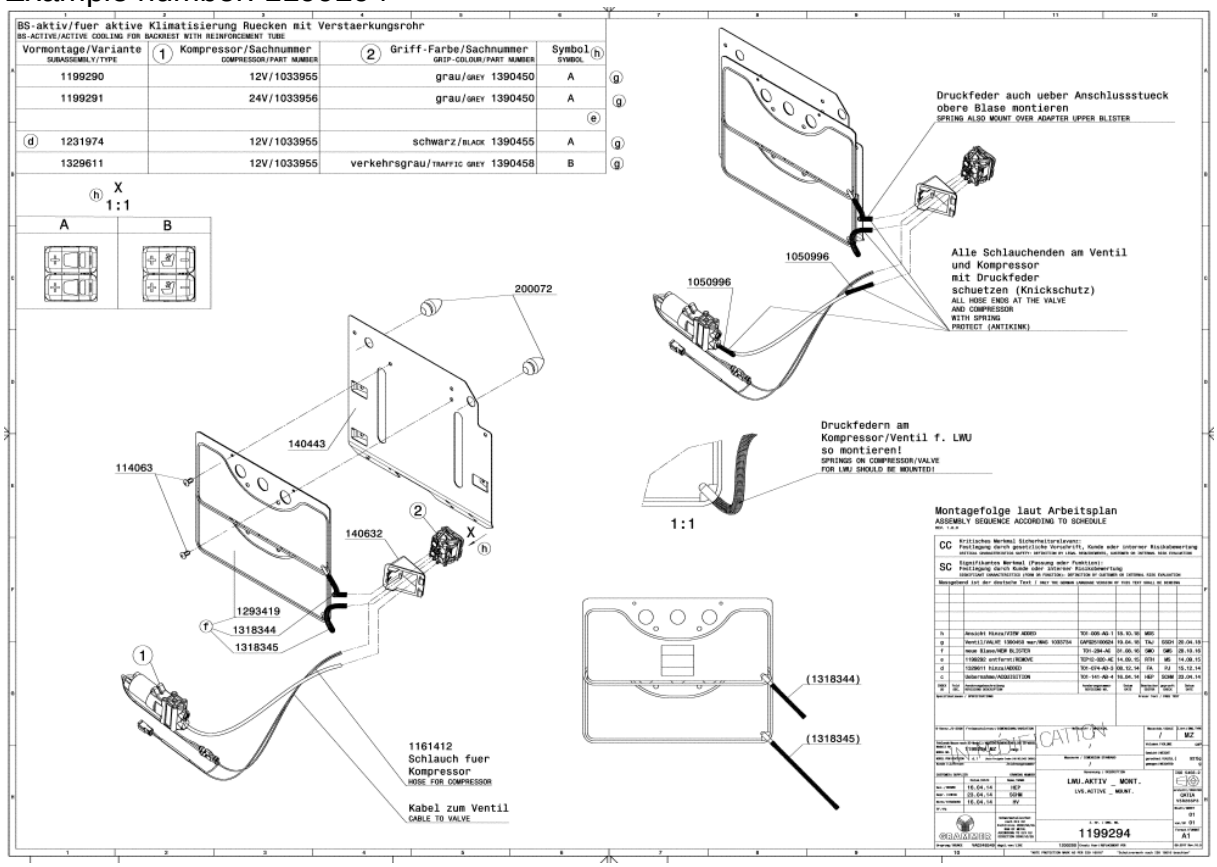

7.3 Functional Assembly Drawings

are compilations of individual parts/assemblies as an installation help for production. If needed, the functional assembly number can be placed next to title block. The designing engineer decides whether a functional assembly is necessary. If interface parts are required for representation, they are combined in an assembly (1234567_MZ) with the functional assembly number. Interface parts are shown with line width 0.18mm. The functional assembly objects can have a dual use in drawings (in functional assembly drawings and in collection drawing for functional assemblies). The drawing has the same number as the functional assembly.

- Drawing number: 1234567
- **F**unctional **A**ssembly number: 1234567
- Assembly number with interface parts: 1234567_MZ
- Title: FB_.....
- Doc. Type: MZ
- SAP Material Type: HALB

Example number: 1420178

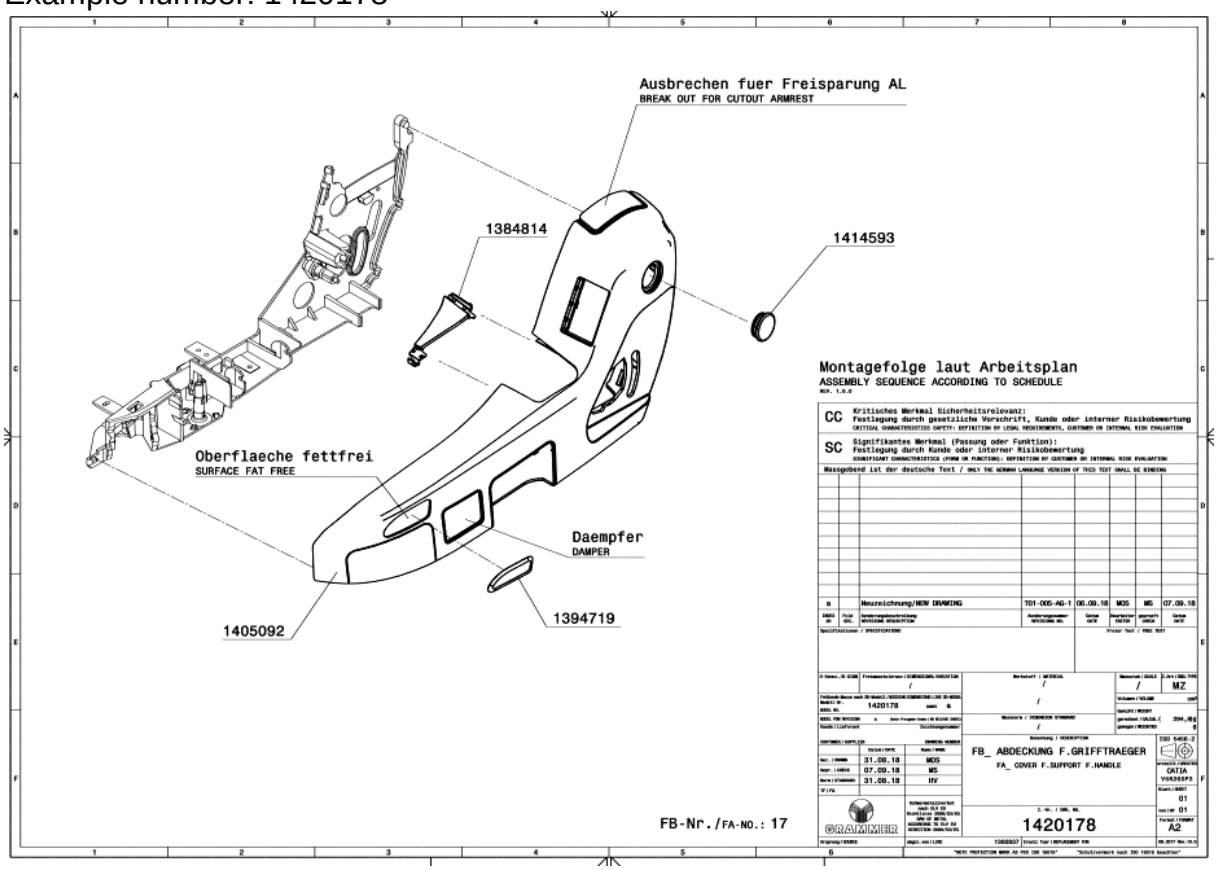

7.4 Collection drawing for functional assemblies

are collections of functional assemblies as an overview for the development. It can be included the XXXXXXX_MZ-assemblies (with interface parts) or the functional assemblies (without interface parts). The drawing number is always different to the assembly numbers. If necessary, XXXXXXX_SZ-assembly can be linked to drawing.

- Drawing number: 1234567
- Assembly numbers: 1111111, 1111112 or 1111111_MZ, 1111112_MZ
- Title: FB_.....
- Doc. Type: **SZ**
- SAP Material Type: ZCHN

Example number: 1240692

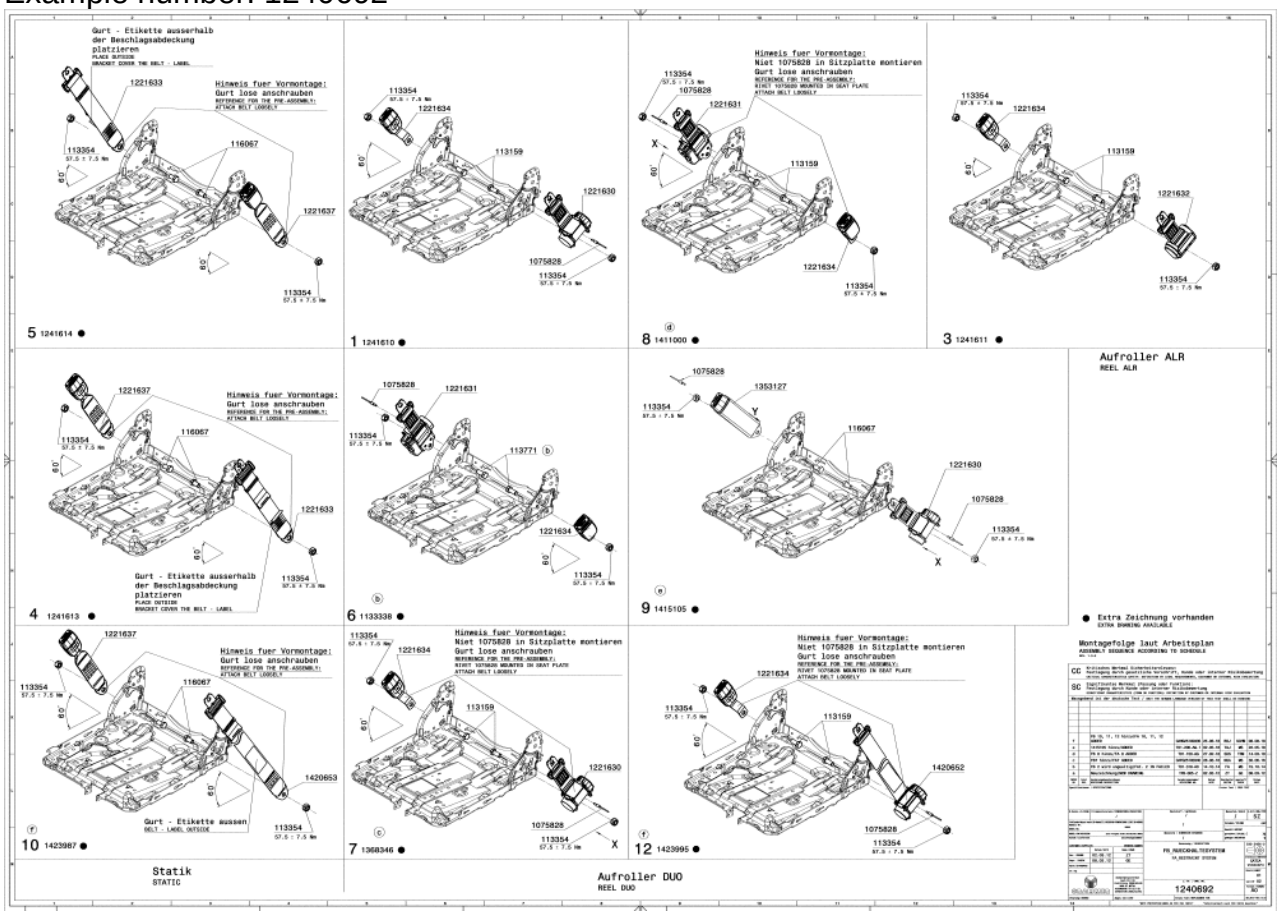

8 Other applicable documents

9 Amendments

02/2019
Take over from Grammer Intranet