Spare parts drawings

Specifications for creating drawings

1 Specifications

Aims: Only assemblies are defined as spare parts, not single parts that are required for the installation of the main part. Exceptions are, for example, backrest extensions, handles and covers for which dismantling of the product is required for installation and removal (attachment/retrofit parts).

Single parts should no longer be available for customers to order. Only in conjunction with the corresponding main assembly (exception Echo/MSG115).

This directive replaces all previous directives on this subject when it enters into force.
The following applies for the use of the new specifications and the lapsing of the previous directive:

- For "old projects still in progress", the rules defined specifically for that project must be followed.
  In the absence of such a provision, in whole or in part, this work instruction shall apply in the necessary places.

- If gaps in definition occur, these points must be dealt with in accordance with previous rules and practised methods in case of doubt.

Legal notices

Copyright © GRAMMER AG

GRAMMER AG
PO Box 1454
D-92204 Amberg, Germany

Re-printing, reproduction and translation of this document, in full or in part, is not permitted without the written permission of GRAMMER AG.

Amberg, September 2018

Contents

1 Specifications 2
2 Drawing layout / distribution for all product areas, apart from Truck 6
2.1 CAD 6
2.2 Naming of spare part drawings 8
2.3 Naming of spare parts overview - spare part assemblies (kit) 8
2.4 Graphical representation 8
2.5 Positioning for spare parts 9
2.6 Labelling 10
2.7 Positioning of the assembly content 11
2.8 Number issuing/number description (overview for upper part/suspension) 12
2.9 Title block for the image part 13
2.10 Drawing title block 14
2.11 Changes in spare parts drawings 15
3 Sample drawings 16
3.1 Offroad (drawing size max. DIN A1, landscape format) 16
3.2 Truck (drawing size DIN V0, portrait format) 17
4 Passing on spare part drawings 18
4.1 Offroad product range 18
4.2 Truck product range 19
4.3 Different product ranges – different ranges for the passing on of spare part drawings 20
4.4 Create a “cropped” DXF file (Offroad range) 21
4.4.1 Step 1 21
4.4.2 Step 2 22

4.4.3 Step 3 23
4.5 Part overview spare part assemblies 24
4.6 Layout of spare part assemblies 26
4.7 Layout of cable harnesses 27
5 Assembly drawings for spare part assemblies 28
6 Small parts for spare part assemblies 30
6.1 Example for the definition of the small parts kits 31
6.2 Components of small parts kits/delivery scope 32
6.3 Spare part drawing with spare part-assembly drawing 33
6.4 Passing on the spare part overview drawing or the spare part assembly drawing 34
7 Creating 3D assemblies for spare part drawings 35
7.1 Seat upper parts, seat suspension, full seats 35
7.1.1 Step 1 35
7.1.2 Step 2 36
8 Structure of the spare part drawings/documents in SmarTeam 37
8.1 Structure of the seat upper part, seat suspension and full seats 37
8.2 Structure of the STU assemblies (Truck) 38
8.3 Structure of the ET assemblies (ET_BG name) 38
8.4 Structure of the ET assemblies TRUCK product range 39
8.5 Diagram of structure and layout of the STU-BG, ET_BG and ET assemblies in the Truck product range 40
8.6 Diagram of structure and layout of the ET assemblies in the Offroad product range 42

2 Drawing layout / distribution for all product areas, apart from Truck

2.1 CAD

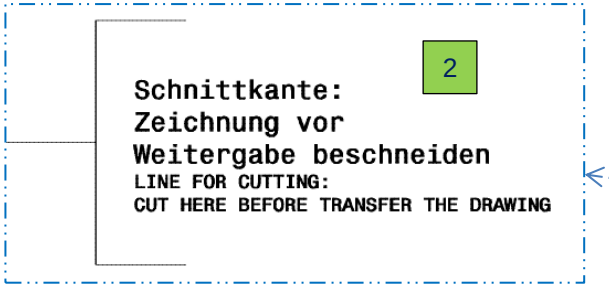

Figure 2.1.2

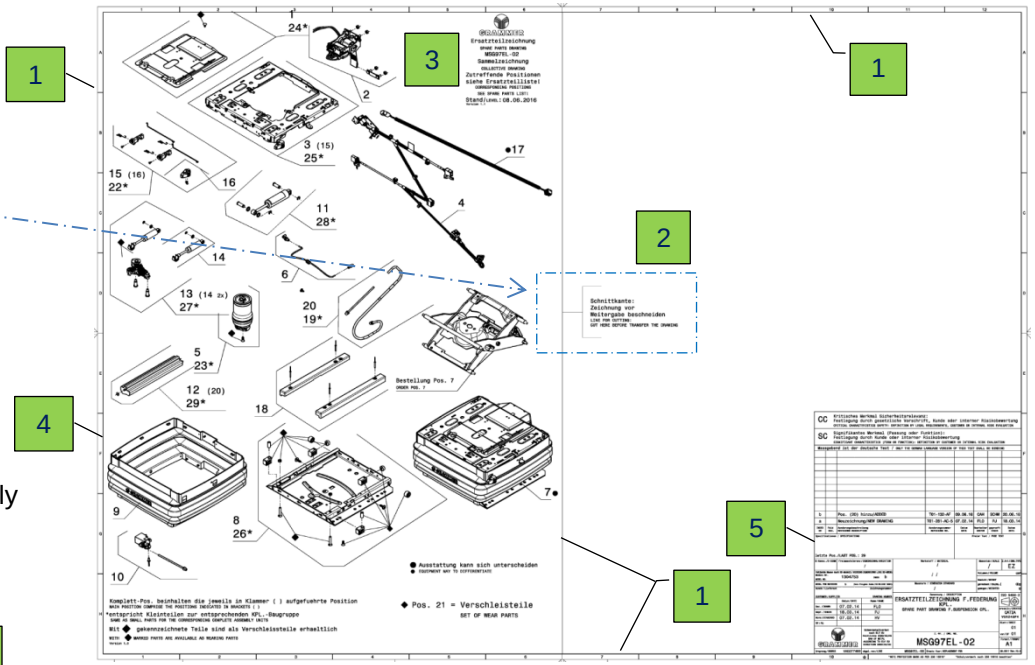

Figure 2.1.1

- Format A1 for complete overview seat top/seat suspension! (Sales request)

- For products with a smaller scope (assemblies) select correspondingly smaller format.

  (Other sales parts, e.g. swivel etc.)

- Divide format in lateral position into two halves by a vertical line 1 (0.35 mm). The left side is for the image part.

- Line 1 is the separating edge for hiding the right side before passing it on to the customer.

- Label cutting edge with text 2 (*figure 2.1.2*). The text is a CatiaV5 catalogue element.

- The title block for the image part 3 (see Figure 2.1.3) is placed "at the top right" in the image part. Care must be taken to ensure that the current company logo is used for each drawing created. When using an existing drawing it must be updated to the current state.
- The **font height** specified for the seat designation or the revision state in this CatiaV5 catalogue element **must not be changed**!

Figure 2.1.3

2.2 Naming of spare part drawings

- SPARE PART DRAWING F. SEAT TOP CPL.
- SPARE PART DRAWING F. SUSPENSION CPL.
- SPARE PART DRAWING F. SEAT CPL.

2.3 Naming of spare parts overview - spare part assemblies (kit)

- SUSP-OT. CPL.
- HANDLE CPL.

2.4 Graphical representation

- Isometric representation (30°/30°), direction of travel from rear right to front left.

- Do not draw parts too far apart! Do not overfill the image part of the spare part drawing.
  If necessary create a new drawing with a new part number.

- For products with a larger scope, the single parts may overlap as long as all single parts can still be clearly identified.

- In order to ensure clarity, not too many different variants should be combined in one drawing.
  If required create a new drawing.

- All spare parts and assemblies must be clearly recognisable.

2.5 Positioning for spare parts

- Single parts are not positioned.
- Only spare parts assemblies containing the corresponding single parts supplied are positioned (*see Figure 2.5.1*).
- If an assembly contains another assembly that cannot be displayed according to *Figure 2.5.1*, but is placed at a different position, the connection is displayed with clamp positions (*see Figure 2.5.3*).
- For similar parts with different part numbers each part must be listed with position number (*see Figure 2.5.2)*.

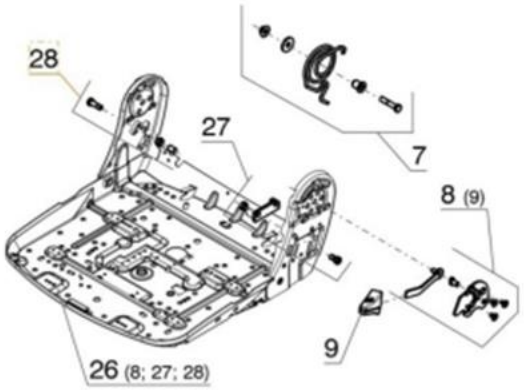

Figure 2.5.1

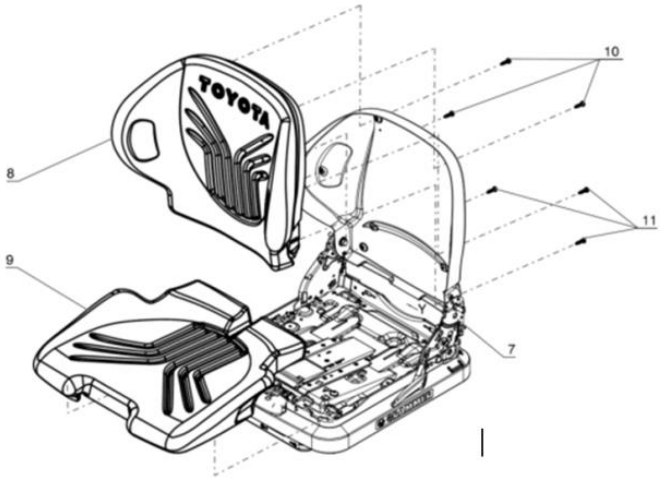

Figure 2.5.2

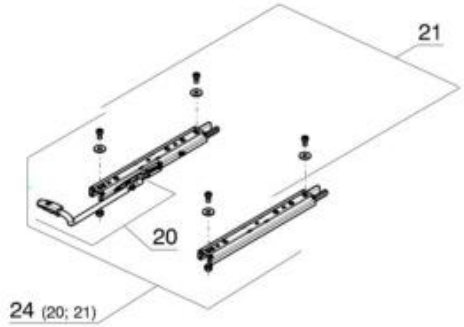

Figure 2.5.3

2.6 Labelling

- German text: 3.5 mm in upper and lower case
- English text: 2.5 mm in upper case

Example:

5 **Komplett-Pos. beinhalten die jeweils in Klammer ( ) aufgefuehrte Position**
MAIN POSITION COMPRISE THE POSITIONS INDICATED IN BRACKETS ( )

➔ Text height 3.5 mm

➔ Text height 2.5 mm

- Font heights of the position numbers: 7 mm
- The last (highest) position must be noted in the drawing title block to avoid double issuing of position numbers!
- If the drawing is supplemented by an extra position this information must also be amended.
- Discarded position numbers must not be reused. **(Also see 2.11)**

Example:

6

Spezifikationen / SPECIFICATIONS

letzte Pos./LAST POS.: 8

2.7 Positioning of the assembly content

a) Behind the position number the position of the supplied other assembly is listed in brackets (*see figure 2.7.1*).

Font heights:

- Position numbers 7 mm
- Assembly content in brackets 5 mm

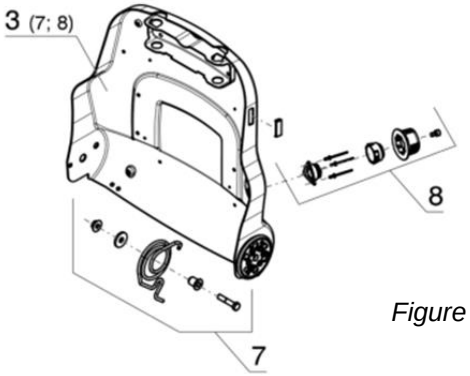

Figure 2.7.1

b) For assembly contents with one quantity per position, the contents can be specified by sequential numbering, e.g. "3 (7-9)" (*see Figure 2.6.2*).

Font heights:

- Position numbers 7 mm
- Assembly content in brackets 5 mm

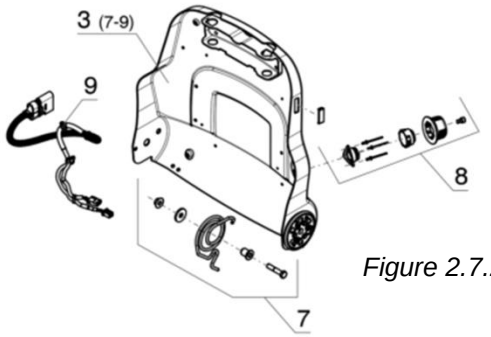

Figure 2.7.2

2.8 Number issuing/number description (overview for upper part/suspension)

- The drawing number is assigned manually by each designer in SAP (mm01 = short code SAP basic data).

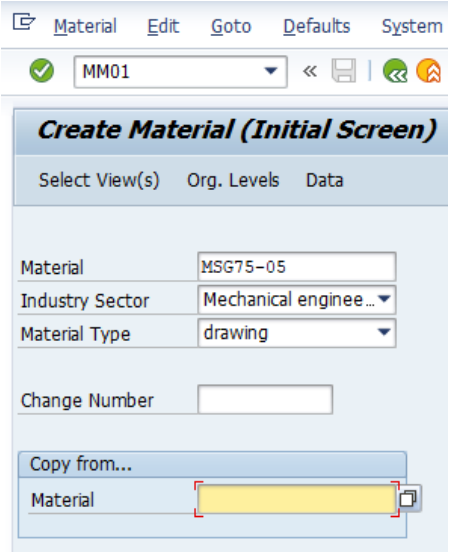

- The drawing number is made up of the product description (seat type) and a count number (sequential number) (see Figure 2.8.1).
- The drawing number is entered both in the drawing title block (see also Figure 2.1.3, 3 *Chapter 2.1.0*) and in the title block for the image part (see Figure 2.10.1 1 Chapter 2.10).
- A new seat variant is provided with a sequential number, e.g. "MSG75-05", "MSG75-06", etc.

Figure 2.8.1

2.9 Title block for the image part

- CAD see section 2.1
- Enter drawing number(s) (see *Figure 2.9.1*)
- Part number drawn (mm01 = short code SAP basic data) → Enter **Above**
- Part number drawn on (mm01 = short code SAP basic data) → Enter **Below**
- Enter validity period (see *Figure 2.9.1*) **ONLY** on drawings of the **Offroad** product range.
  Drawings of the **Truck** product range do **NOT** need these details since only one variant is represented per drawing!
- Status: Creation date or change date of the drawing
  Please note: The validity period must be updated to the respective modification date in the drawing title block for each change!
- Font height for drawing number(s), designation and status (date): 3.5 mm

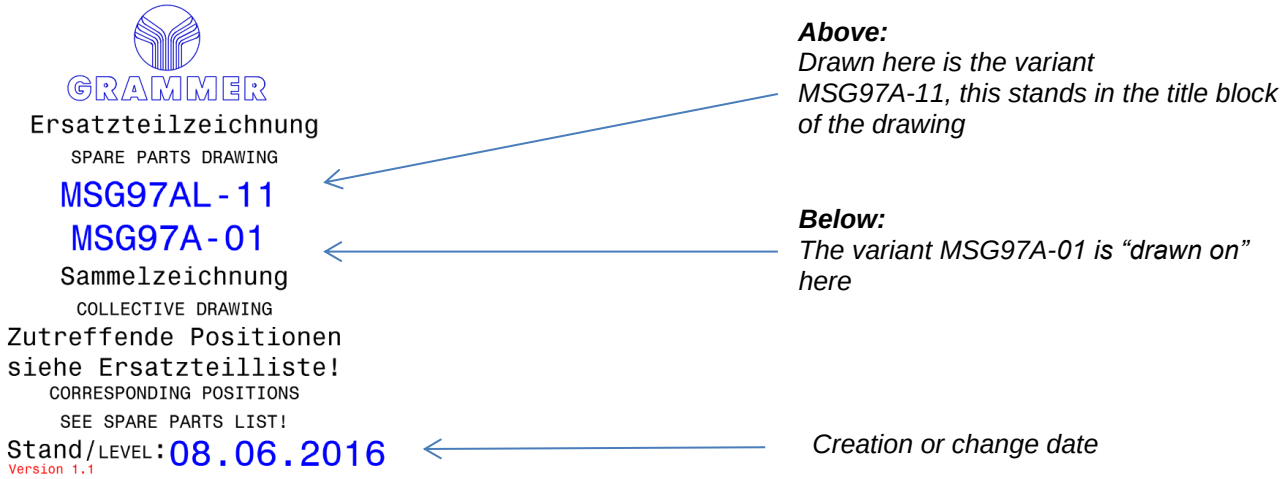

Figure 2.9.1

2.10 Drawing title block

- Drawing number 1

- Description 2

  “SPARE PART DRAWING F. SEAT TOP CPL.” OR “SPARE PART DRAWING F. SUSPENSION CPL.”

- Drawing type “EZ“ 3

- last (highest) position 4

  in image part (update required for each accessible added position number).

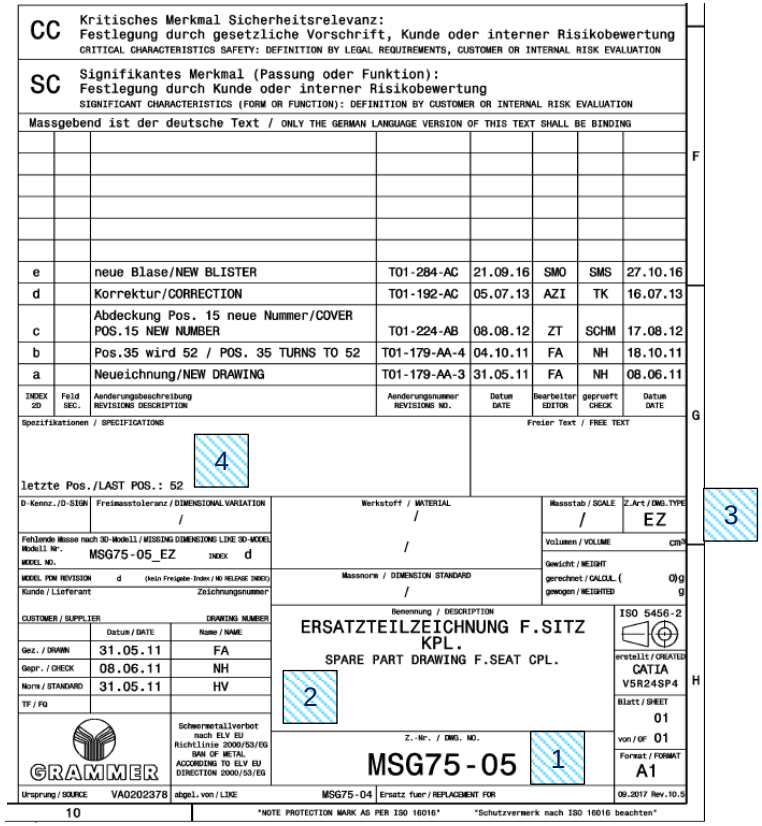

Figure 2.10.1

2.11 Changes in spare parts drawings

- Enter change index / change description / change number in the change field in the title block (German / English).

e		neue Blase/NEW BLISTER	T01-284-AC	21.09.16	SMO	SMS	27.10.16
d		Korrektur/CORRECTION	T01-192-AC	05.07.13	AZI	TK	16.07.13
c		Abdeckung Pos. 15 neue Nummer/COVER POS.15 NEW NUMBER	T01-224-AB	08.08.12	ZT	SCHM	17.08.12
b		Pos.35 wird 52 / POS. 35 TURNS TO 52	T01-179-AA-4	04.10.11	FA	NH	18.10.11
a		Neueichnung/NEW DRAWING	T01-179-AA-3	31.05.11	FA	NH	08.06.11
INDEX 2D	Feld SEC.	Aenderungsbeschreibung REVISIONS DESCRIPTION	Aenderungsnummer REVISIONS NO.	Datum DATE	Bearbeiter EDITOR	geprueft CHECK	Datum DATE

- Enter in “image part” of **Seat cpl. / Upper part cpl. / Suspension cpl. NO change index!**
  In this case “image part” means may only be drawn on “the left area” of the drawing!

- In the image part of **single part assemblies (“kit”) a change index** is entered!

- Update status (date) in the title block image part.

- For additions to the drawings with further positions the information “last position” must be updated in the drawing title block.

- **Discarded position numbers** must **not be reused**. The aim is to avoid overlaps with spare parts documents already in circulation. An **exception** to this are **replaceable parts**, which are defined under the same position.

- All discarded or unoccupied positions must be noted in the drawing part.
  Please add and label in the drawing with the following catalogue element from the drawing catalogue:

```
Folgende entfallenen Positionen nicht wieder belegen: 11, 55, 56, 60, 61
DO NOT OCCUPY THE FOLLOWING OMITTED POSITIONS: ...
```

3 Sample drawings

3.1 Offroad (drawing size max. DIN A1, landscape format)

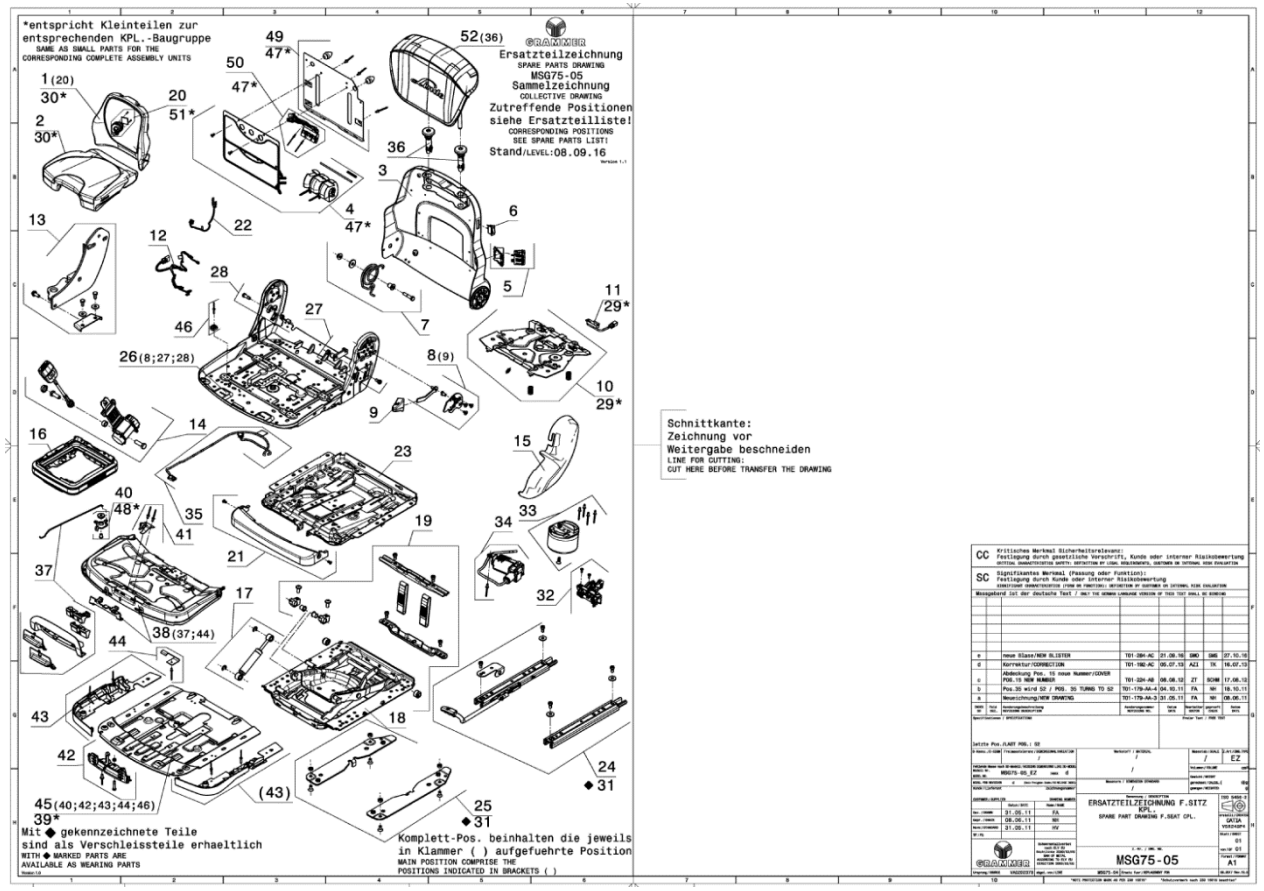

3.2 Truck (drawing size DIN V0, portrait format)

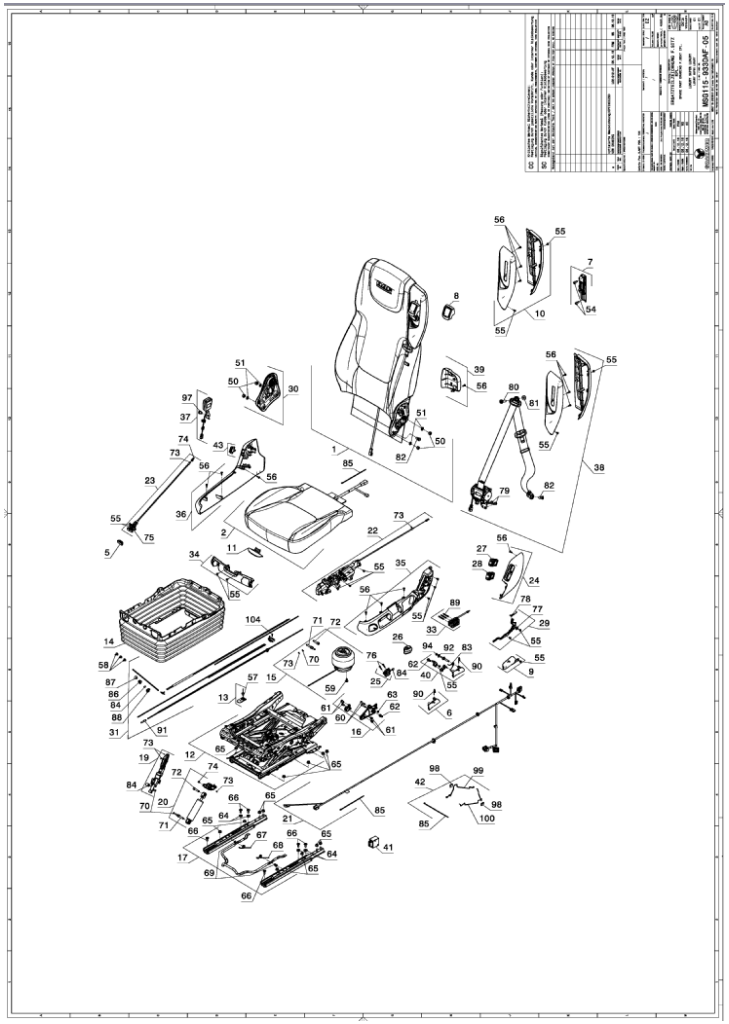

4 Passing on spare part drawings

4.1 Offroad product range

Customer only receives the spare part list or the image part of the spare part page (only left page).
Spare part drawings from the “Offroad” range are used for several customers at the same time.
In order to keep the passing on of drawings to the customer for spare part orders "neutral", only the "neutral" left part is passed on.

This spare parts list is created by the requesting department itself.

The image part is separated by CAD Service team at the marked line * during data exchange!

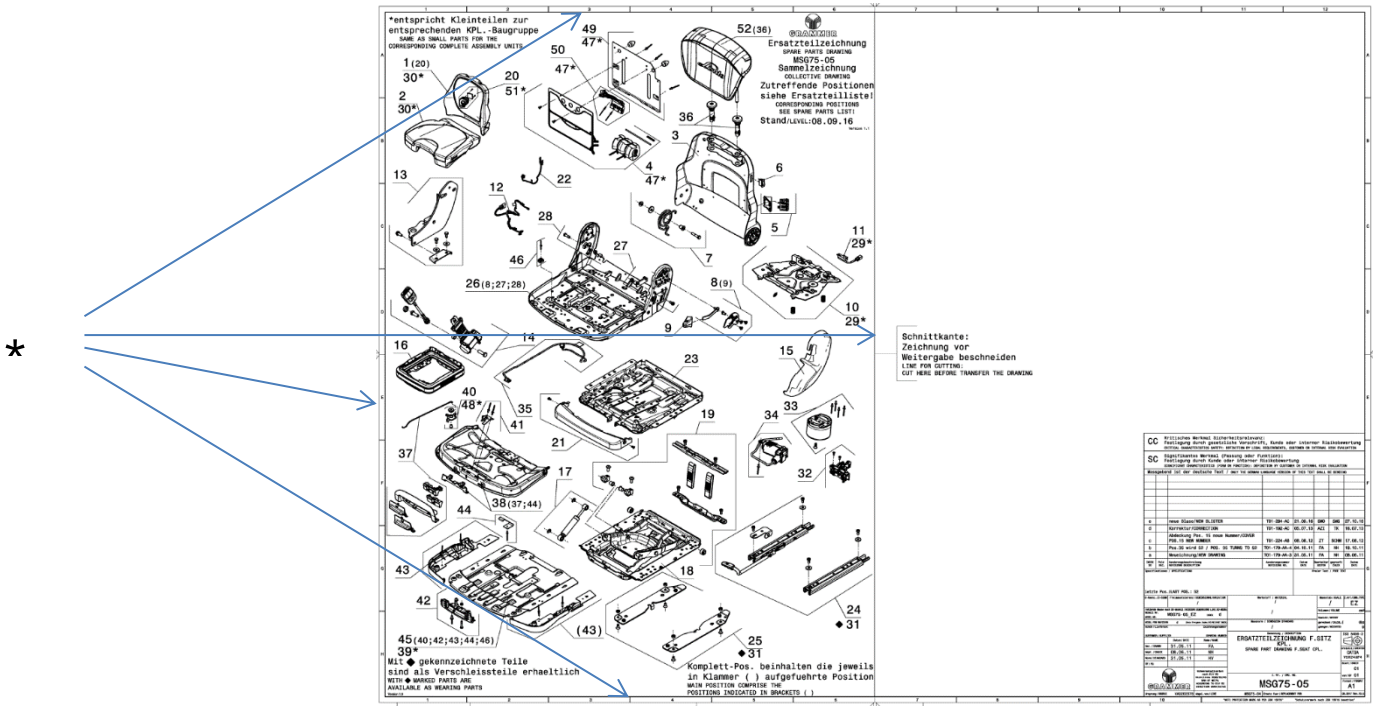

4.2 Truck product range

Customer receives the complete drawing, the title block does not need to be hidden.

Drawings from the **Truck** product area do **NOT** need the “Validity period” details since only one variant is represented per drawing/customer!

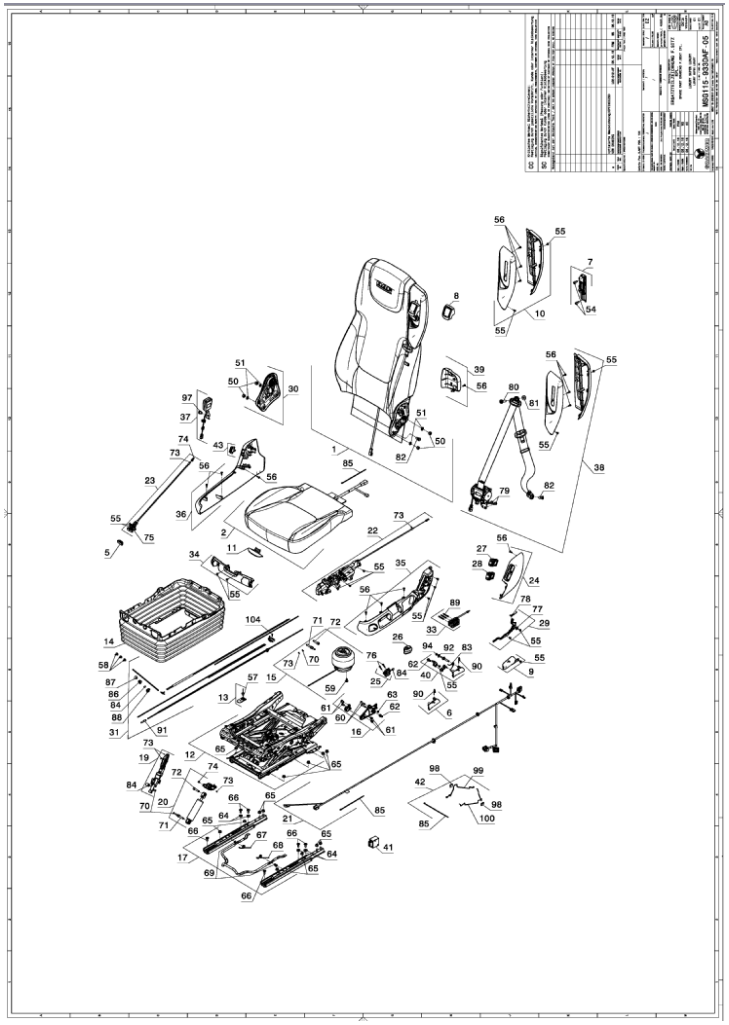

4.3 Different product ranges – different ranges for the passing on of spare part drawings

When exchanging data from spare parts drawings for the Offroad product range, only the red marked view is made available to the data receiver:

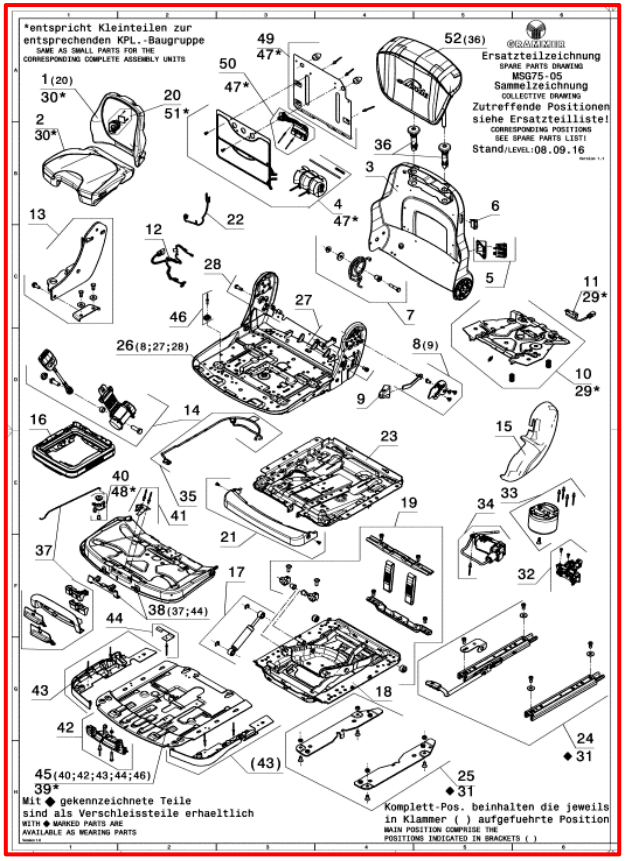

For the Truck product range, the whole drawing must be passed on to the data receiver, including the image part with the title block.

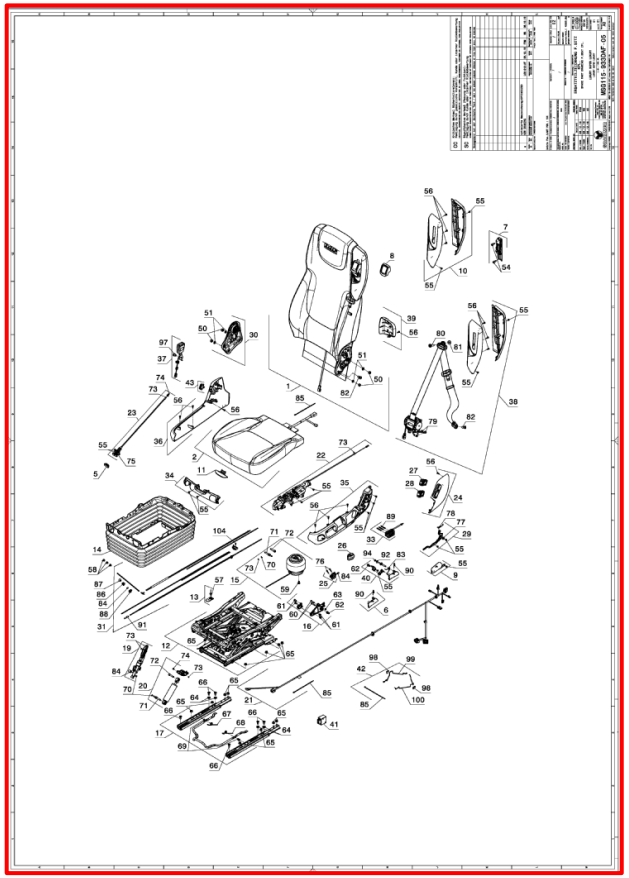

4.4 Create a “cropped” DXF file (Offroad range)

4.4.1 Step 1

Delete the drawing frame with the function “delete_TitleBlock.CatScript”. Then delete the “cutting edge” text.

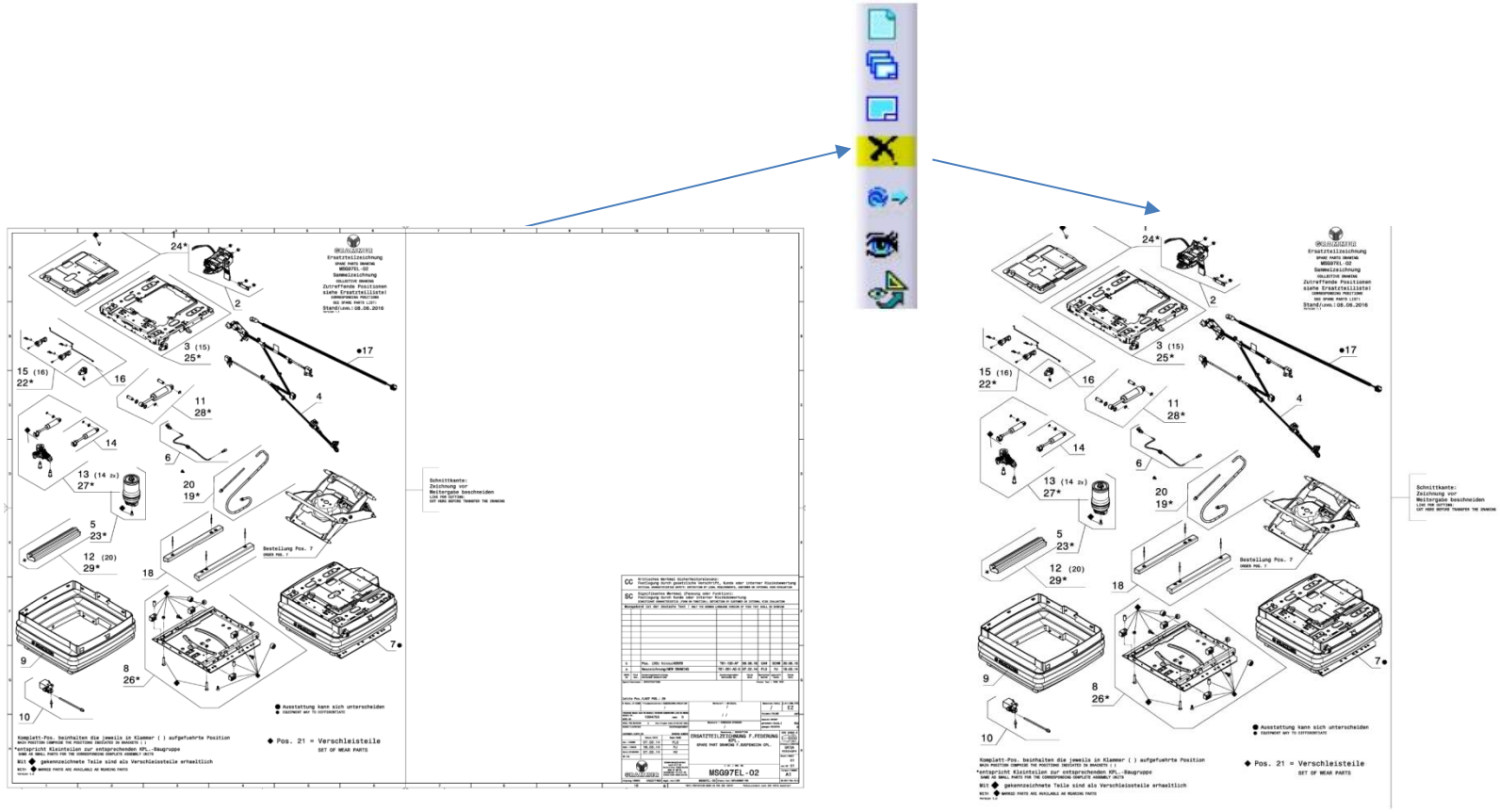

4.4.2 Step 2

In Catia under “Page Setup”, select DIN AX as portrait format for the “Sheet presentation”.
→ Always chose a drawing size one number smaller than the original format!
Ensure that the most up-to-date drawing standard is set in CatiaV5.

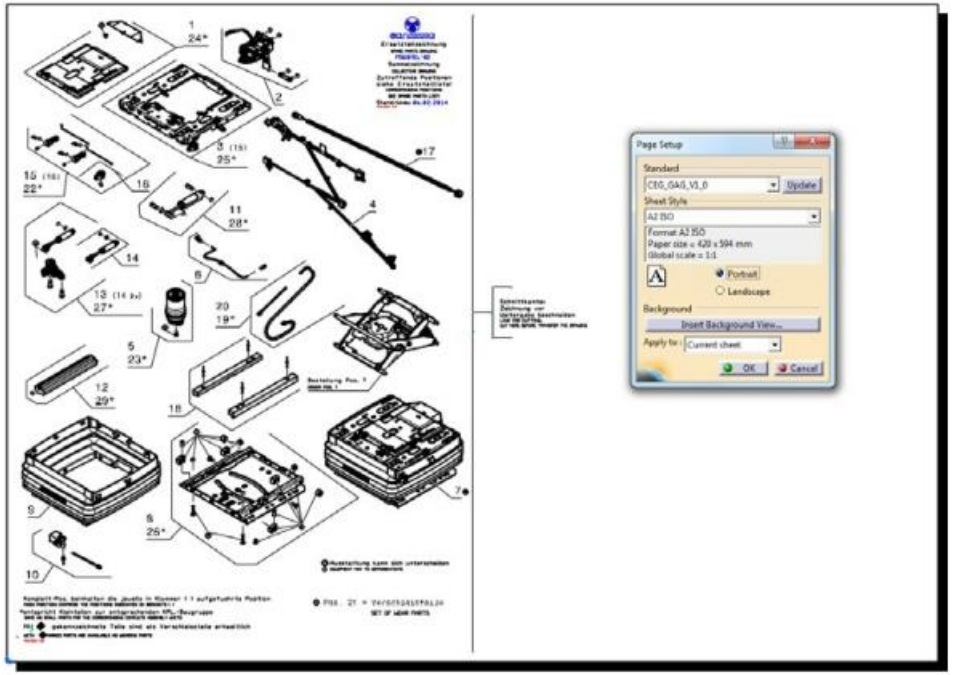

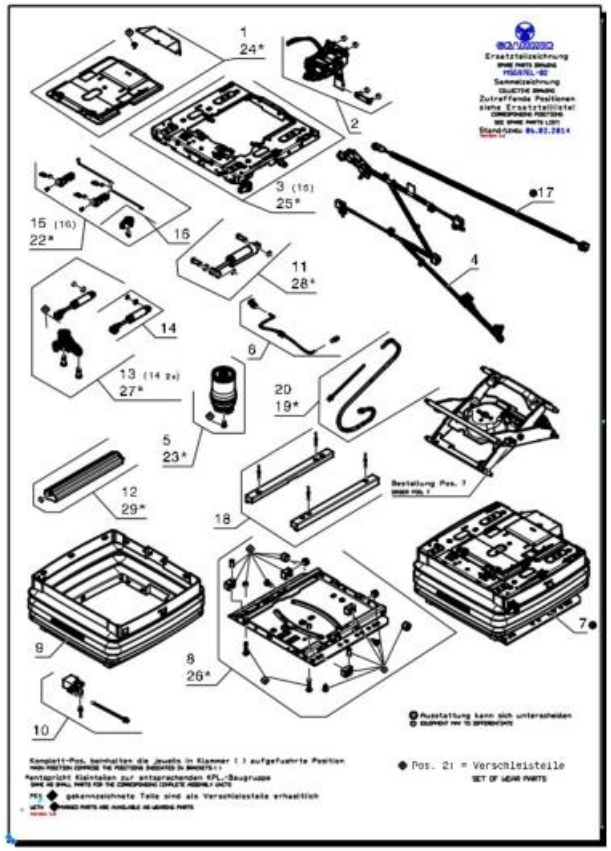

4.4.3 Step 3

Save drawing on computer as local file in DXF format with “Save as”.

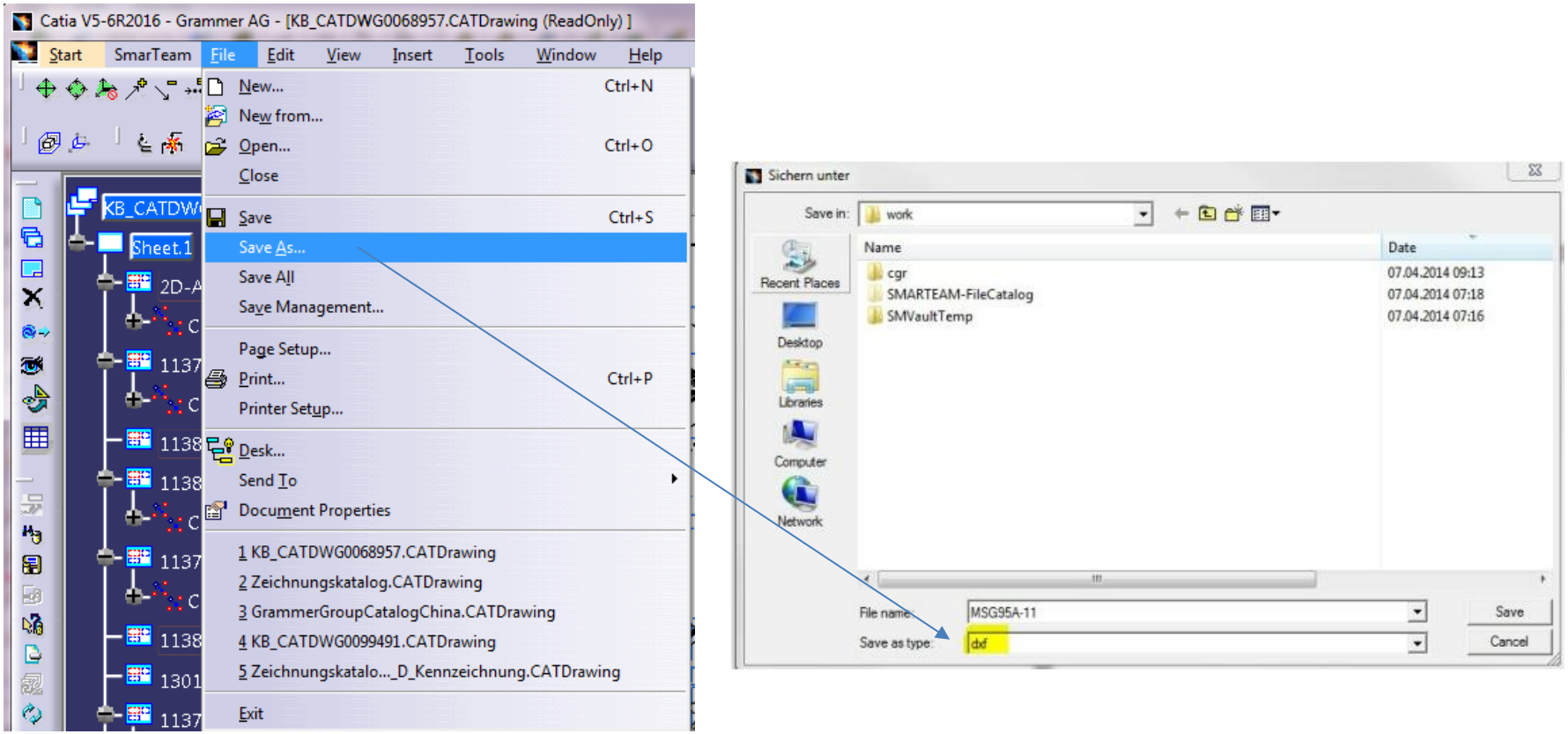

4.5 Part overview spare part assemblies

- On the spare parts drawing (general overview) and in the spare parts list, no single parts are shown or positioned as spare parts according to the current spare parts concept.
  Therefore, the customer is no longer in a position to determine the scope of delivery of spare parts assemblies on the basis of these documents.

  For this reason it is necessary to give the customer an overview from the delivery scope of the spare part assembly.

  For this reason an overview drawing 1 (size maximum DIN A2) is created for each spare part assembly. All supplied parts can be identified on this overview drawing without the single part numbers also being specified here.

- The collective drawings for spare part kits 2 (*Figure 4.5.2*) consist of an image part with position numbers, a table describing the positions and a table of collective variants. 3

- In the tables 4 the part positions, part descriptions (German/English) and the quantity details must be noted.

  The type plate, packaging material and installation instructions must be indicated **WITHOUT** position number in the table at the top of the drawing.

  In the column “Standard/dimension/material/note” the following details are to be specified in German and English:

  - Standard parts → DIN/ISO + dimensions + surface + strength
  - Catalogue parts → Dimensions, poss. material if danger of mixing up exists with other parts or assemblies or if the component is strength-relevant
  - Grammer-specific components → Neutralise with “/”, since only available at GRAMMER. A note is only necessary is confusion with other components is possible.

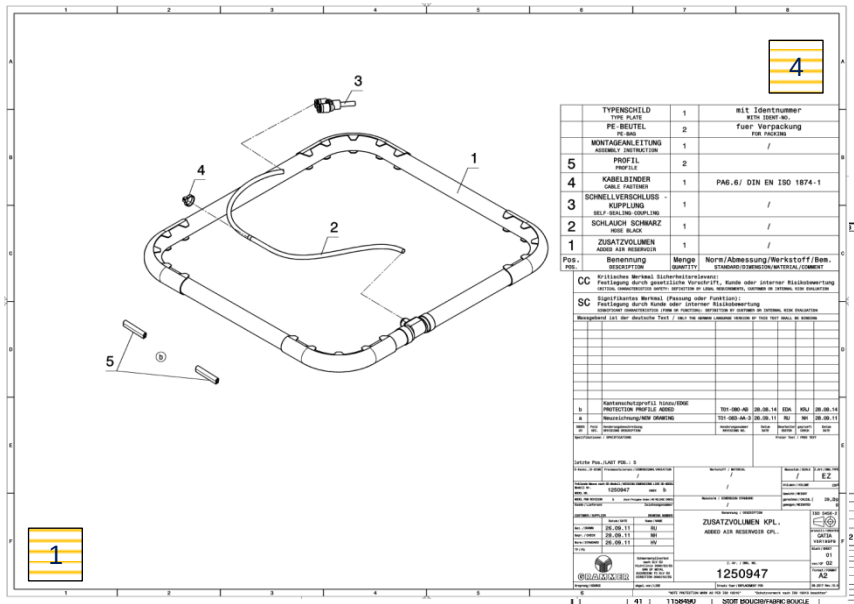

Figure 4.5.1
Example drawing for spare part kit

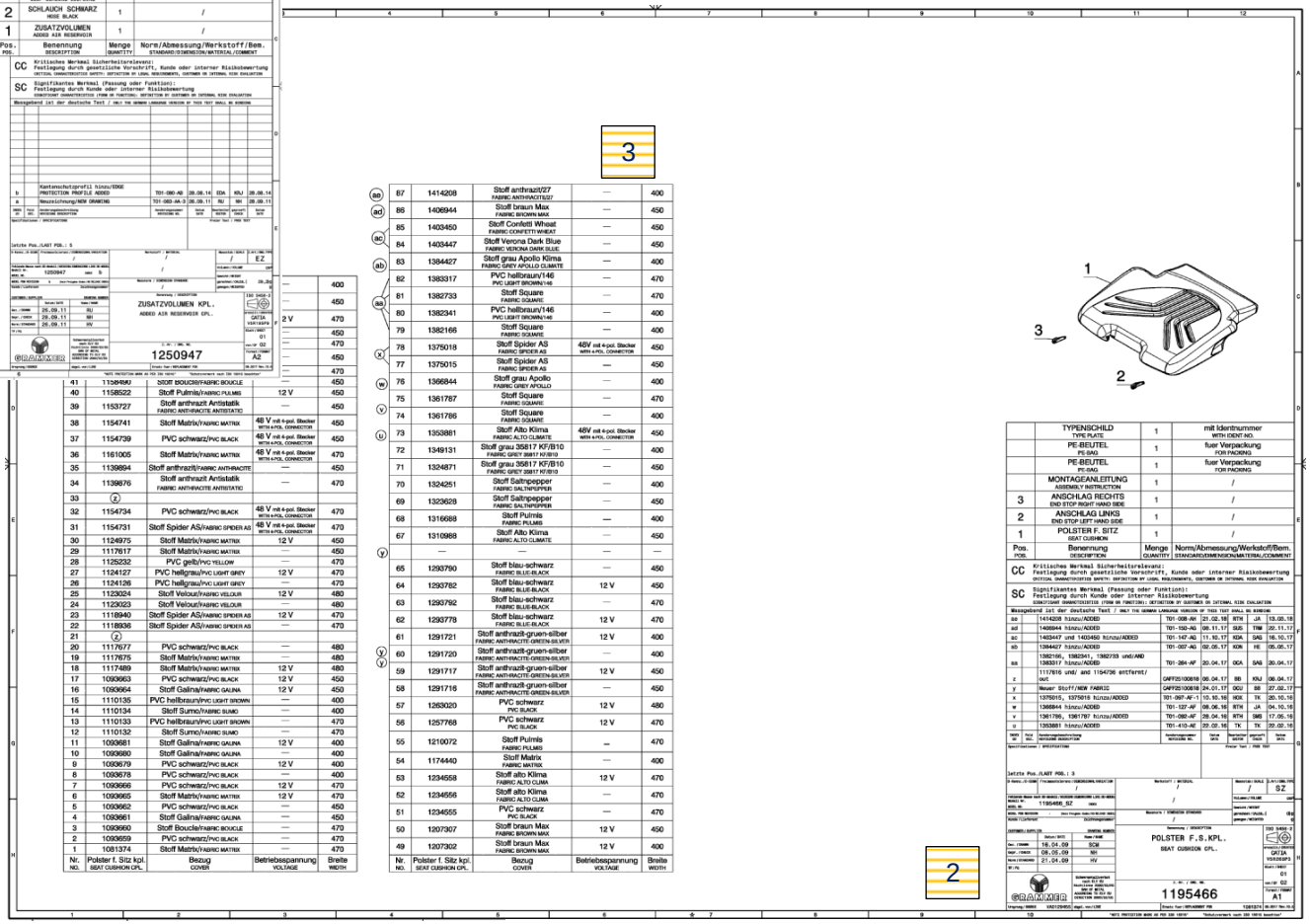

Figure 4.5.2
Example collective drawing for spare part kits with variant table

4.6 Layout of spare part assemblies

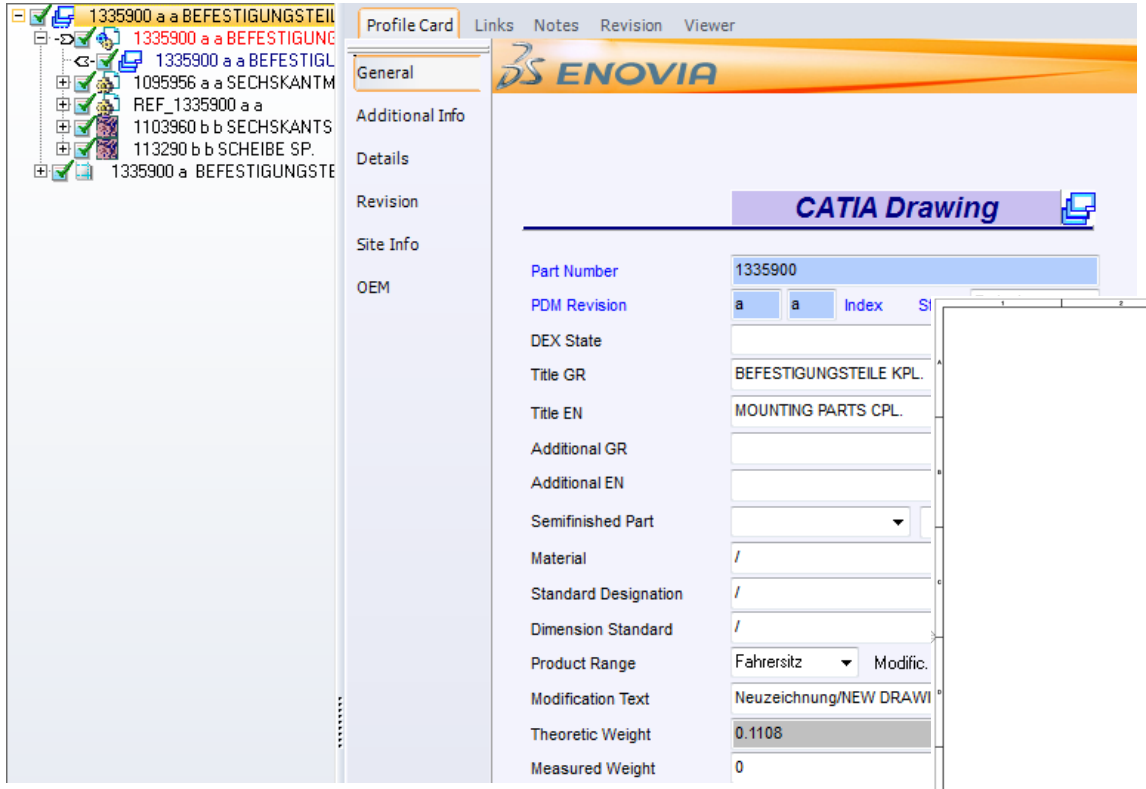

The number of parts in 3D must match the number on the drawing.

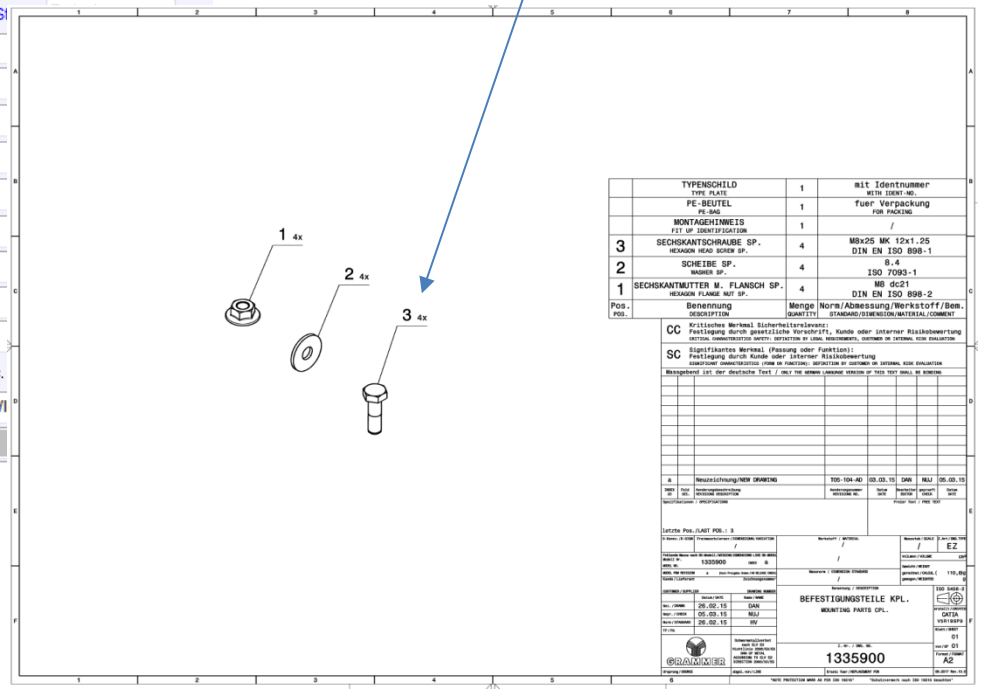

In spare part assemblies all parts must be available in 3D in the correct quantity. From this, create a scene with only **one** visible part at a time (weight calculation is automatic).

4.7 Layout of cable harnesses

The actual number of the cable harness (usually called "_P03") is directly linked to the spare parts drawing of the cable harness.

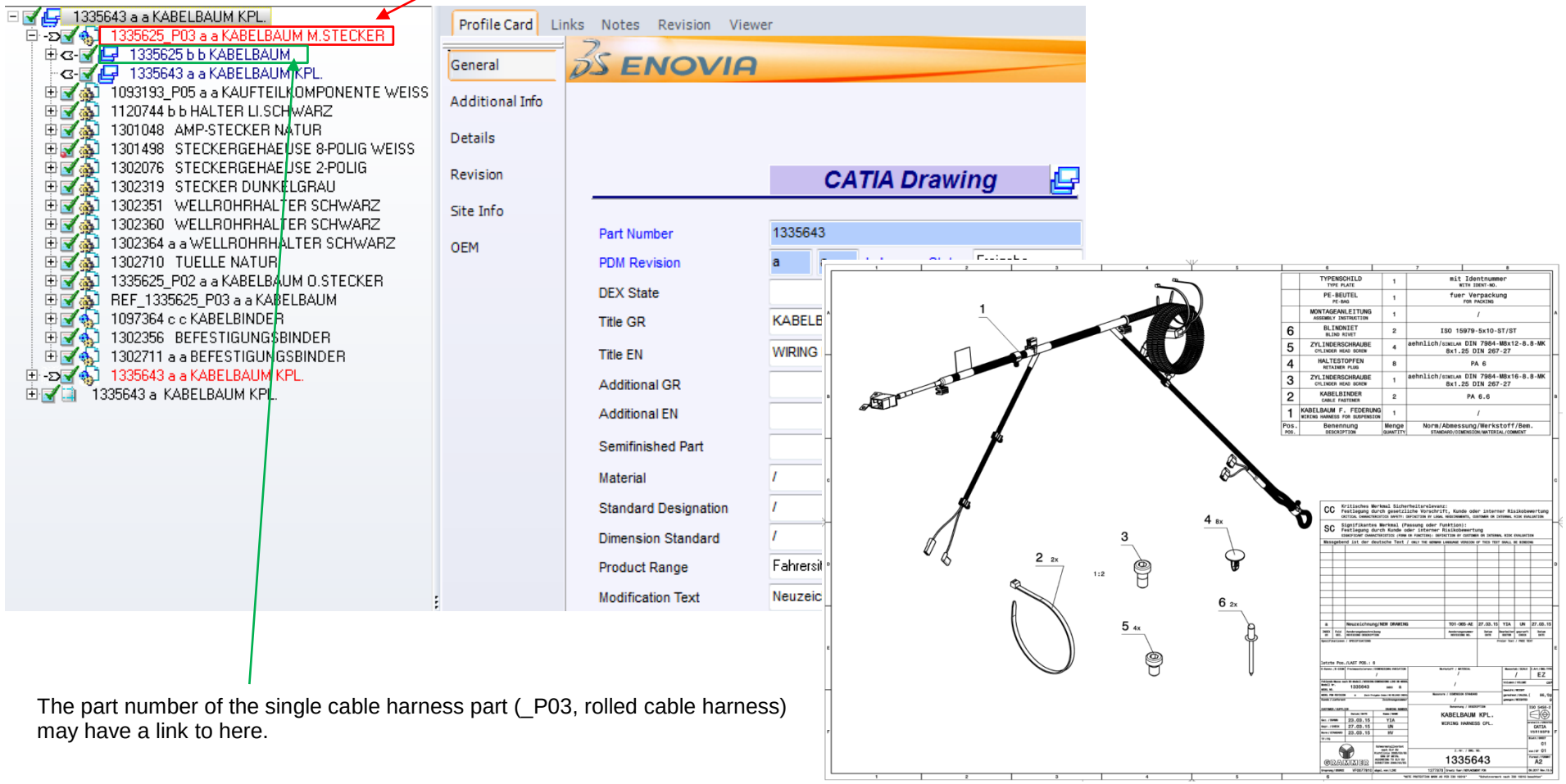

The part number of the single cable harness part (_P03, rolled cable harness) may have a link to here.

5 Assembly drawings for spare part assemblies

- In order not to make the assembly of the spare parts unnecessarily difficult for the customer (large number of single parts), they are pre-assembled in a meaningful way so far that a problem-free installation is possible.

  This pre-assembly of the spare part assemblies must be coordinated with the production planners.

- A spare parts installation drawing (drawing type "EM") is prepared (if required) for the assembly of the spare parts assemblies. This “EM” is Sheet 2 of the respective overview drawing (automatic generation in Catia when added a second sheet for drawing type “EZ”).

  However, this is NOT passed on to the customer.
  (see Figure 5.0.1)
  Also see *Chapter 6.4*

- On the basis of the spare part assembly drawing, the spare part assembly work places are equipped with parts and corresponding assembly tools.

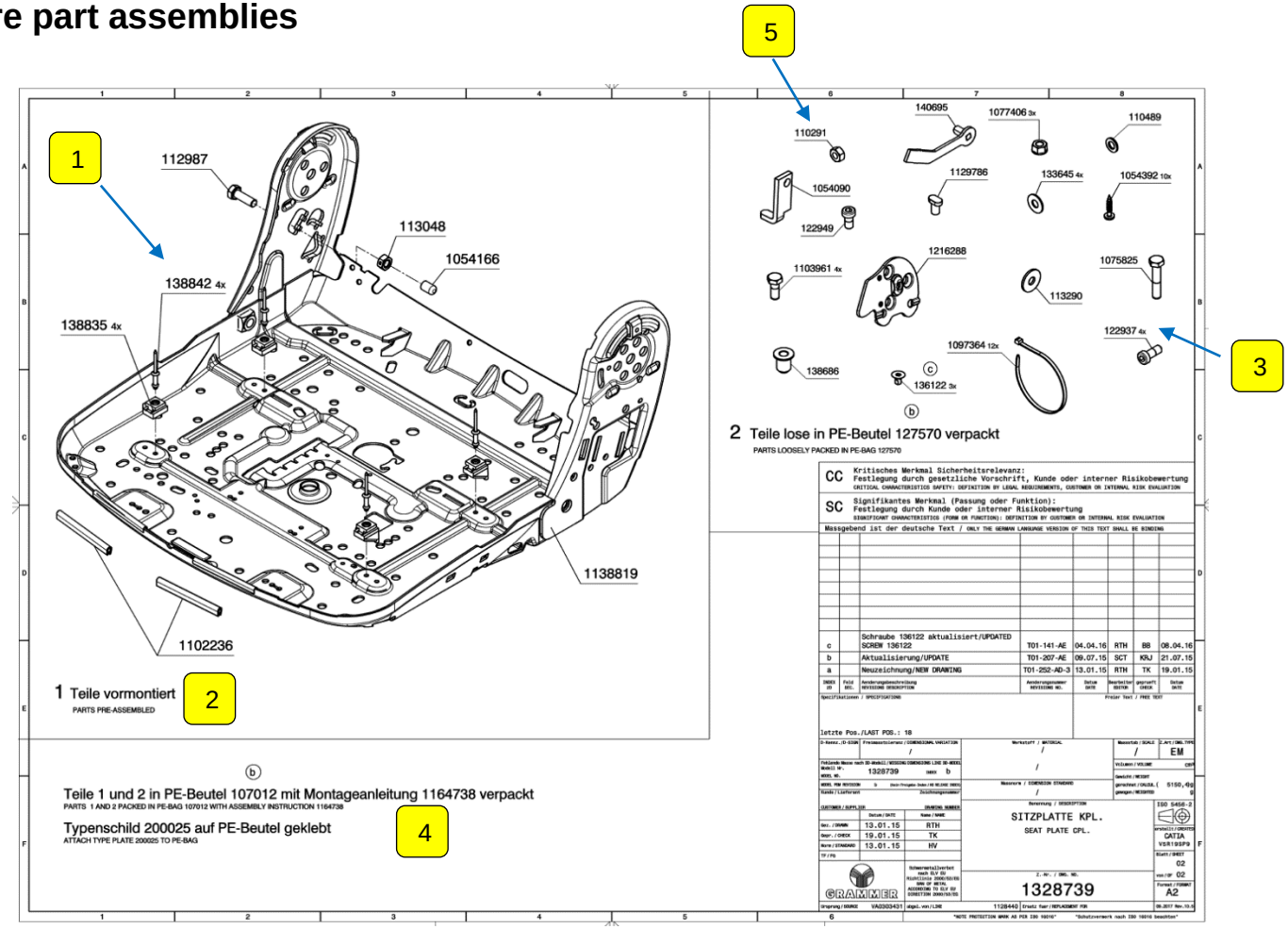

Figure 5.0.1

1 ○ Single parts are pre-assembled to such an extent that assembly of the pre-assembled assembly on the seat is still possible (coordination with the assembly planner required).
Possible packaging material specified to protect the surface.

2 ○ Complete pre-assembly assemblies from the series production with single parts.
Pack parts individually as required for protection.
It is also possible to integrate a pre-assembly assembly from series manufacturing into the assembly if this is necessary or possible.

3 ○ Include pre-assembly assembly from series production directly in the spare parts assembly.
Loose small parts that cannot be pre-assembled or are required for final assembly on the seat are packed separately in the PE bag and enclosed.

4 ○ Document packaging (packaging type) and attachment of the type plate.

5 ○ Specify tightening torque (font height 3.5 mm) directly under the part number. (font height 5 mm).

6 Small parts for spare part assemblies

If small parts are required that cannot be specified in detail in the spare parts overview drawing (e.g. specific GRAMMER components) and therefore cannot be procured by the customer on the open market, meaningful small parts kits are specified for each spare parts assembly.

These small parts kits are written only with position number under the main position number of the spare part assembly. An "asterisk" is placed in front of this position to indicate that this position is the respective kit of small parts.

For this marking there is a corresponding footnote (catalogue element from Catia) in the picture part of the spare parts drawing.

The numbers of the respective small part kits are listed in the spare part list.

6.1 Example for the definition of the small parts kits

When ordering from position 1, all small parts necessary for assembly are supplied together with the backrest cushion.

If only one or several or the small parts are required and the completed backrest do not have to be purchased here, position 30 is offered as a small parts kit for the backrest.

If the customer wants to procure the single parts themselves on the open market (usually these are standard parts) the identification is carried out via the spare part overview drawing.

Position 1 = Main assembly back cushion cpl.
Position 30 = Small parts kit for position 1

Footnote for the labelling of the positioning of the small parts kits

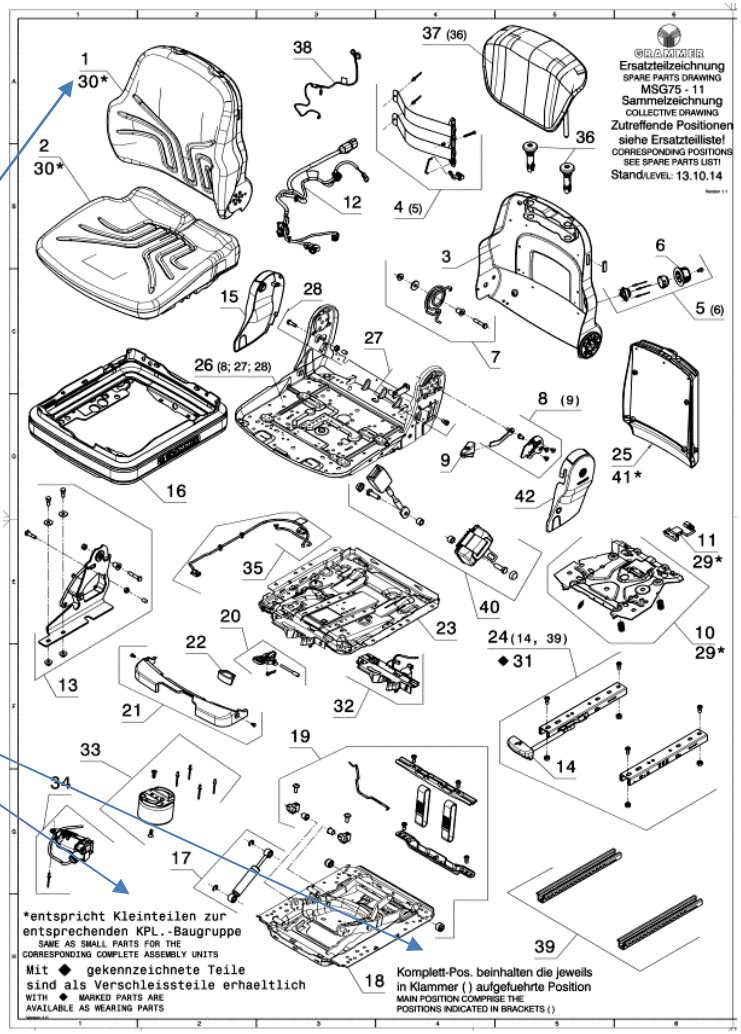

6.2 Components of small parts kits/delivery scope

- **Grammer-specific parts**
  All Grammer-specific parts are components of small parts kits (see position 2 for example).

- **Standard parts**
  Standard parts can be identified from the precise DIN EN ISO standard details in the drawing and thus procured on the open market by the customer. Therefore, these parts are not necessarily part of the small parts kit. This has to be decided from case to case (also see position 4).

- **Parts similar to standards**
  Parts similar to standards must be included in the small parts kit, since the customer cannot purchase them on the open market (see e.g. position 5).

- **Problem parts**
  If there are problem parts which must always be replaced during repairs, they must also be part of the small parts kit (see e.g. position 3).

Table of the delivery scope

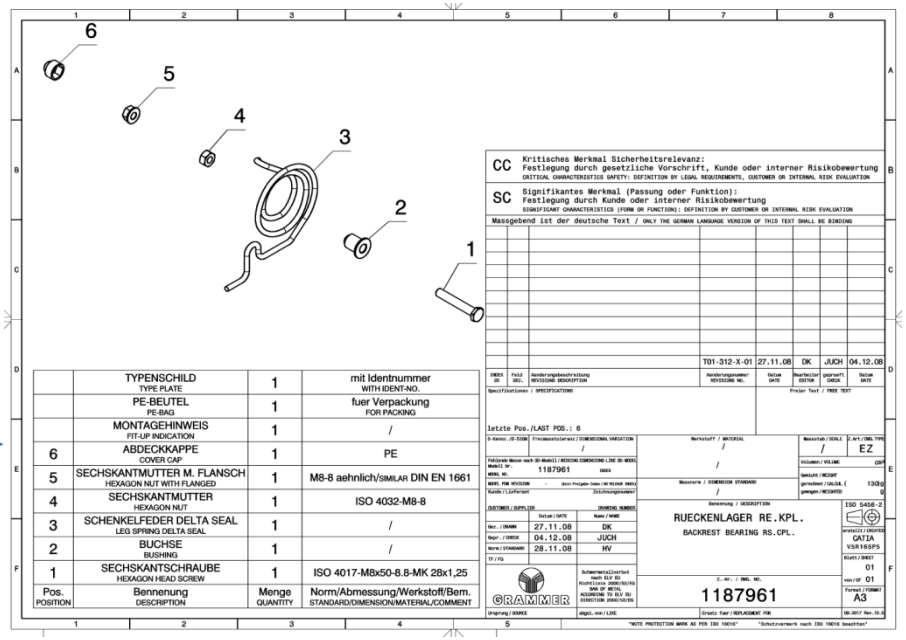

Pos. POSITION	Bennenung DESCRIPTION	Menge QUANTITY	Norm/Abmessung/Werkstoff/Bem. STANDARD/DIMENSION/MATERIAL/COMMENT
	TYPENSCHILD TYPE PLATE	1	mit Identnummer WITH IDENT-NO.
	PE-BEUTEL PE-BAG	1	fuer Verpackung FOR PACKING
	MONTAGEHINWEIS FIT-UP INDICATION	1	/
6	ABDECKKAPPE COVER CAP	1	PE
5	SECHSKANTMUTTER M. FLANSCH HEXAGON NUT WITH FLANGED	1	M8-8 aehnlich/SIMILAR DIN EN 1661
4	SECHSKANTMUTTER HEXAGON NUT	1	ISO 4032-M8-8
3	SCHENKELFEDER DELTA SEAL LEG SPRING DELTA SEAL	1	/
2	BUCHSE BUSHING	1	/
1	SECHSKANTSCHRAUBE HEXAGON HEAD SCREW	1	ISO 4017-M8x50-8.8-MK 28x1,25

6.3 Spare part drawing with spare part-assembly drawing

- **Sheet 1 (see Figure 6.4.1) of the spare part drawing**

  Sheet 1 is labelled by the drawing type **“EZ”.**
  The spare part assembly is indicated on sheet 1.

  Only sheet 1 is passed on to the customer.

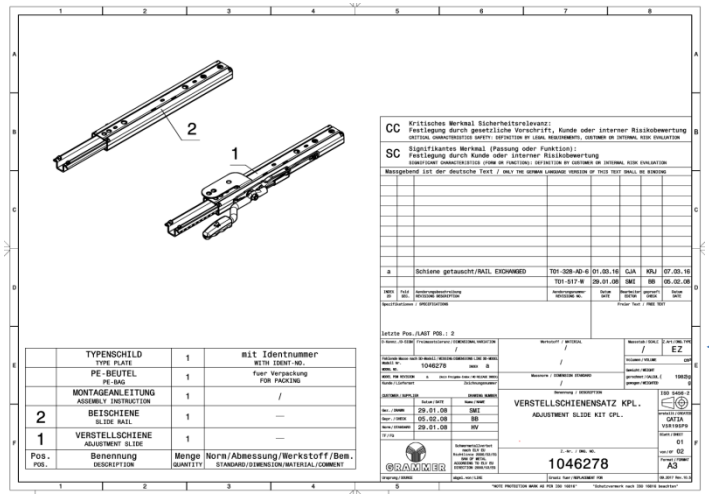

Figure 6.4.1

- **Sheet 2 (see Figure 6.4.2) of the spare part drawing**

  Sheet 2 is labelled by the drawing type **“EM”.**
  Sheet 2 is only used internally for the pre-assembly of the single components.
  All single parts of the spare part assembly are represented. Likewise, important details, which are required for the assembly of the single parts, e.g. torque levels, are indicated on this sheet 2.

  Sheet 2 is not passed on to the customer.

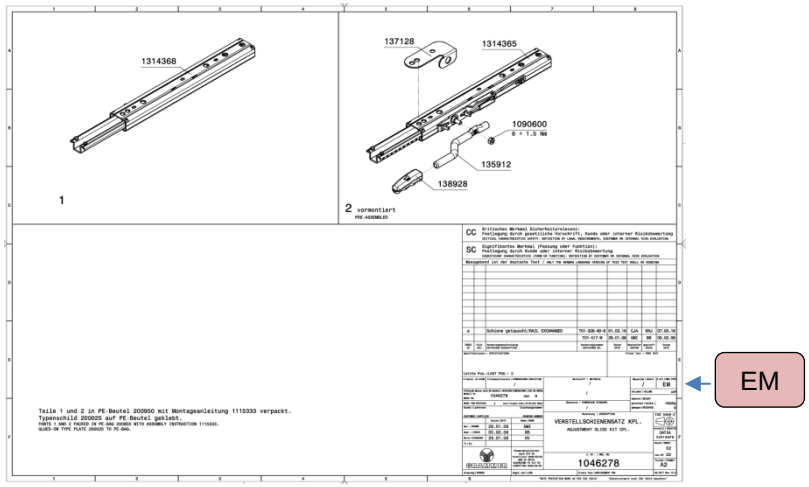

Figure 6.4.2

6.4 Passing on the spare part overview drawing or the spare part assembly drawing

- The spare parts overview drawing, like the overall spare parts overview drawing, is part of the documents that must be made available to the customer.

- Single part numbers of the spare part assemblies must not be given to customers.
  Therefore, sheet 2 of the spare part assembly drawing ("EM") must NOT be passed on to the customer!

  For this purpose, the access authorizations for Sheet 1 or Sheet 2 are regulated differently in the SAP DMS.
  In these drawing types the viewing rights or the export function differ between the departments.

  The following SAP DMS roles exist:

  - Access to sheet 1 in SAP → Overview drawing → "Standard"
  - Access to sheet 2 in SAP → Spare part assembly drawing → "No authorisation for the Sales department"

Therefore the specification of the correct document type is very important for drawing creation.
This specification is used to manage documents and rights in SAP as described above!

7 Creating 3D assemblies for spare part drawings

7.1 Seat upper parts, seat suspension, full seats

7.1.1 Step 1

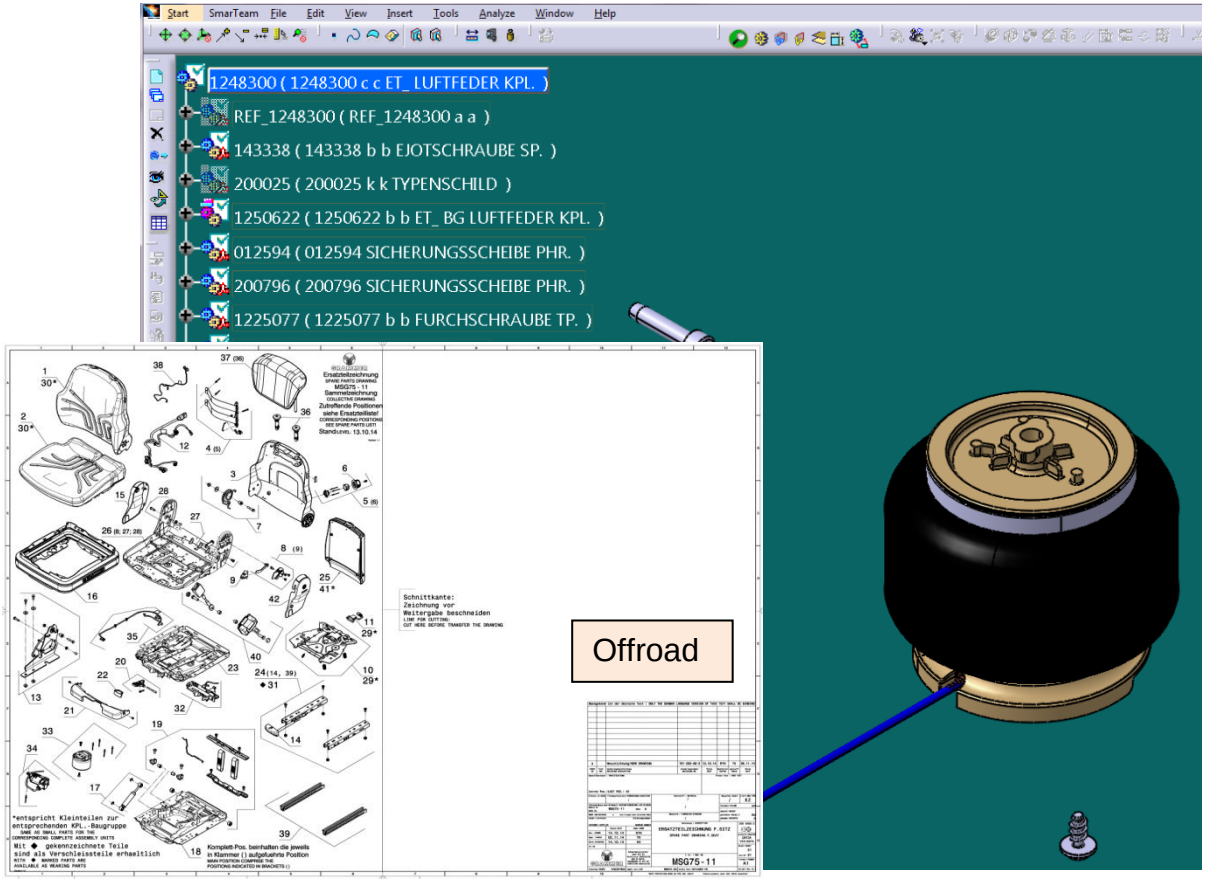

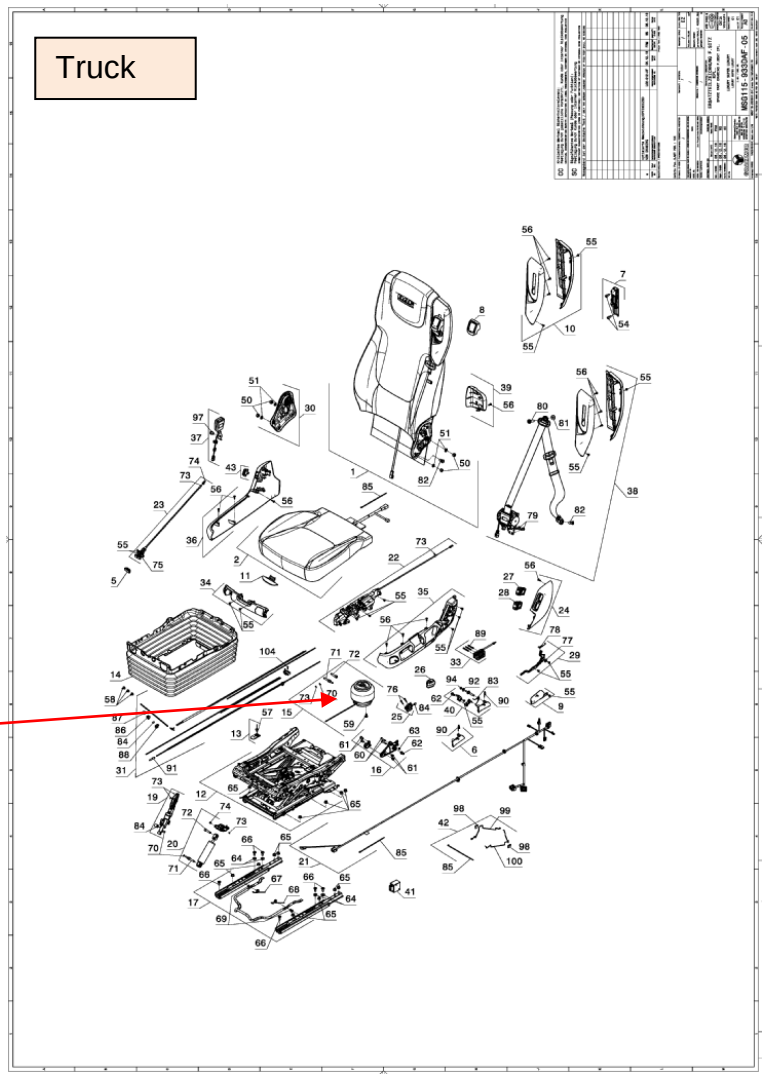

7.1.2 Step 2

Place the scenes of the spare parts/ETX assemblies in the drawing, if necessary change the scale. Delete the links in the ISO view using the “Isolate” function.
The view must be named with the part number of the ET/ETX assembly.

- Name of the view:
  “Pos. no._part number_ETX”

For several variants (“SZ”) with the same position number the views can also be named the same (e.g. “01_1389588_ETX”).

- Naming 3D data:
  Part number: part number_ETX

- Naming: ETX_pos. no. (optional, but recommended for better classification)

<u>Note:</u>
An ETX assembly is only created when the view cannot be used from an existing spare part kit.

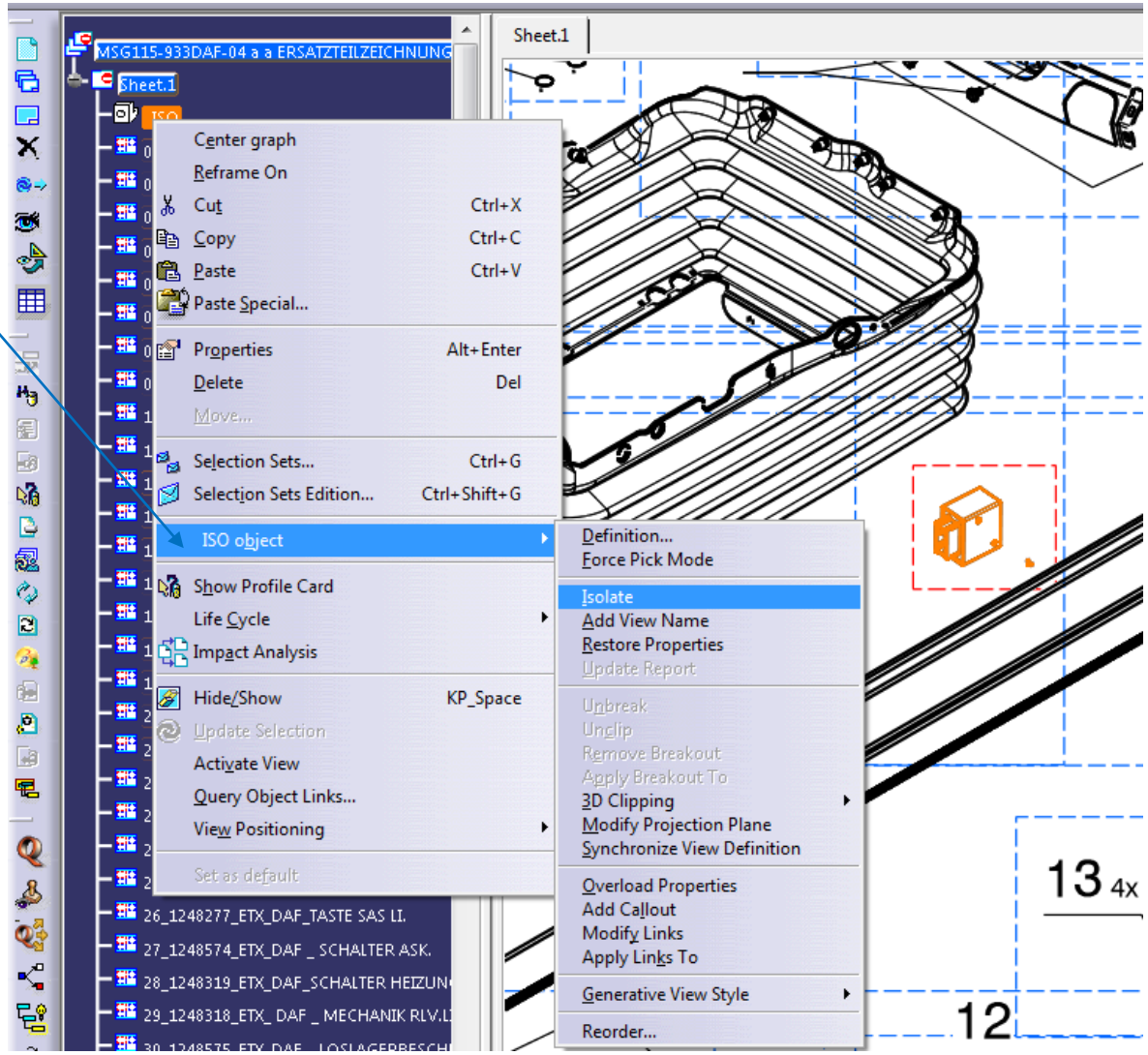

8 Structure of the spare part drawings/documents in SmarTeam

8.1 Structure of the seat upper part, seat suspension and full seats

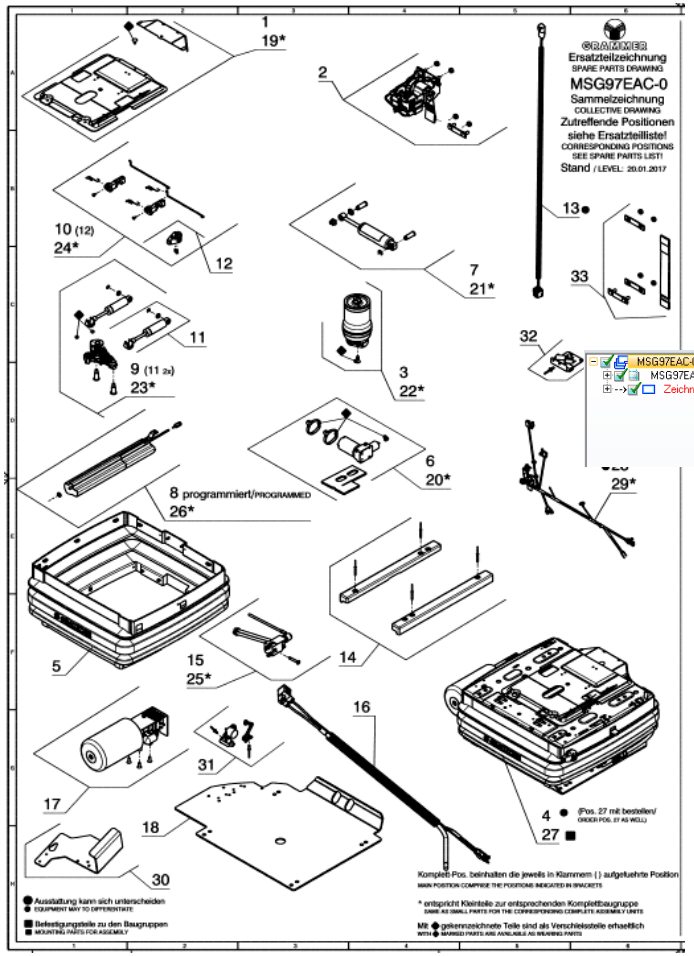

Structure/layout for Truck and Offroad identical!

Offroad:

Truck:

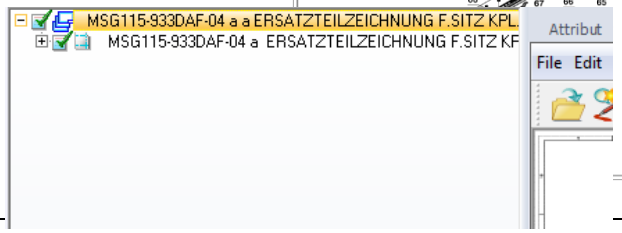

8.2 Structure of the STU assemblies (Truck)

- The STU-BG required for an assembly/complete seat result in its bill of materials.
- The parts of an STU assembly do not have to be placed, but recognisable (described in 3D if necessary).
- Only parts with seven-digit part numberbs may be installed.
- A drawing derivation (as part drawing etc.) of the STU-BG is not permitted.

- Name: First "STU-BG", then the name may be composed directly from abbreviations (e.g. "ABD L. DAF", “BED R. SAS NSV” etc.).

  The usual rule that the first name must be written out is not applicable here!

  Example: “STU-BG SAA.RS.”

8.3 Structure of the ET assemblies (ET_BG name)

- This ET_BG is built from the STU_BG assemblies, as far as possible.
- The STU_BG does not have to be placed in the ET_BG. It is sufficient if the STU-BG is moved so that it’s recognisable.
- A drawing derivation (as part drawing etc.) of the ET_BG is not permitted.
- Part number.: seven digit

- Name: First “EG_BG”, then the name may be composed directly from the abbreviations.

  The usual rule that the first name must be written out is not applicable here!

  Example: “ET_BG SUSP. LS. CPL.”

8.4 Structure of the ET assemblies TRUCK product range

- These assemblies are mainly built from the ET assemblies. Also partial use of seven digit part numbers is allowed.
  The ET assemblies must always be derived on a drawing. However, the individual assemblies and components do not necessarily have to be placed, it is sufficient if they are positioned approximately correctly in a scene.

- Part number: seven digit

- Name: First “ET_” then the first name must be written out, other names follow as abbreviations.

  Here the usual rule for correct naming applies!

  Example: “ET_BACK L. CPL.”

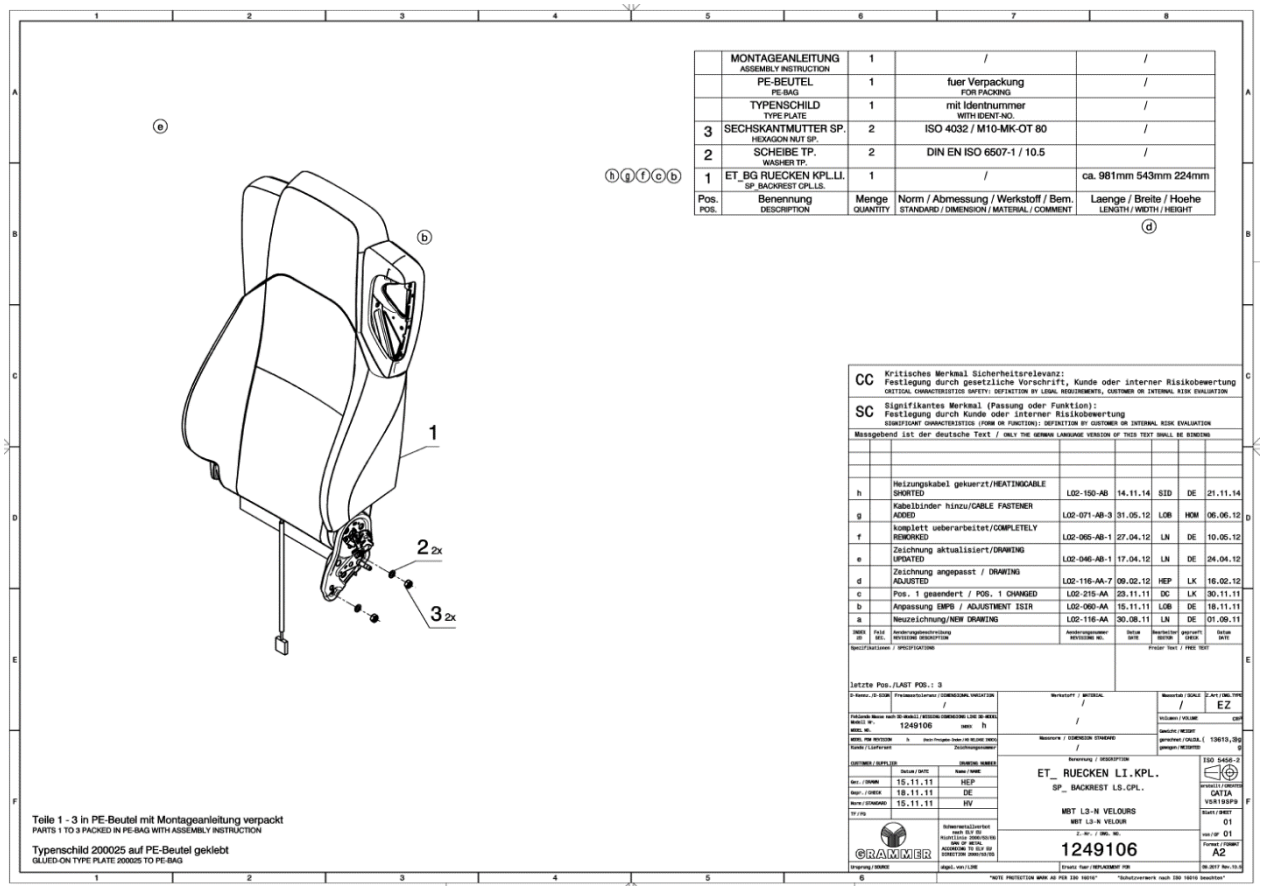

8.5 Diagram of structure and layout of the STU-BG, ET_BG and ET assemblies in the Truck product range

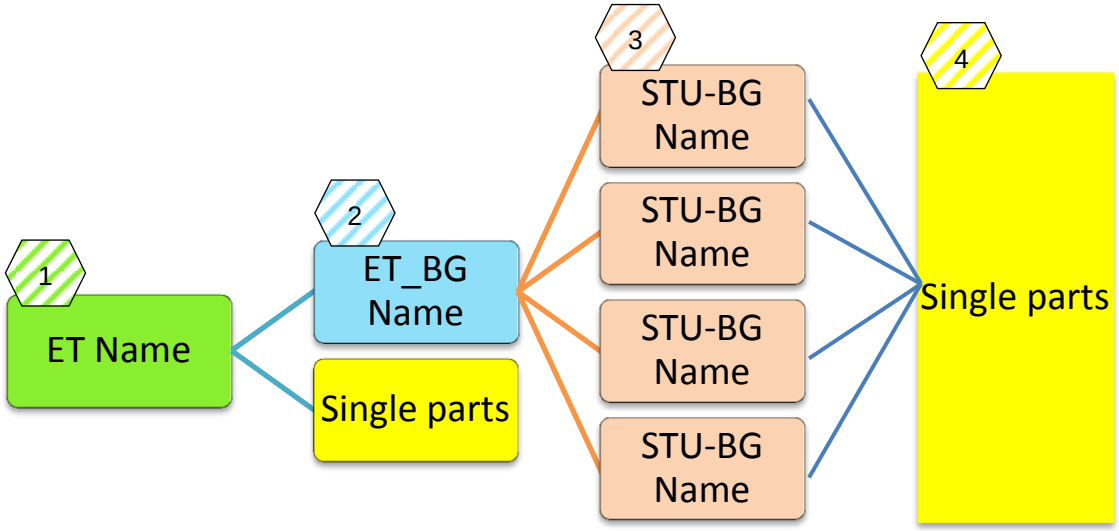

Also see Figure 8.5.1

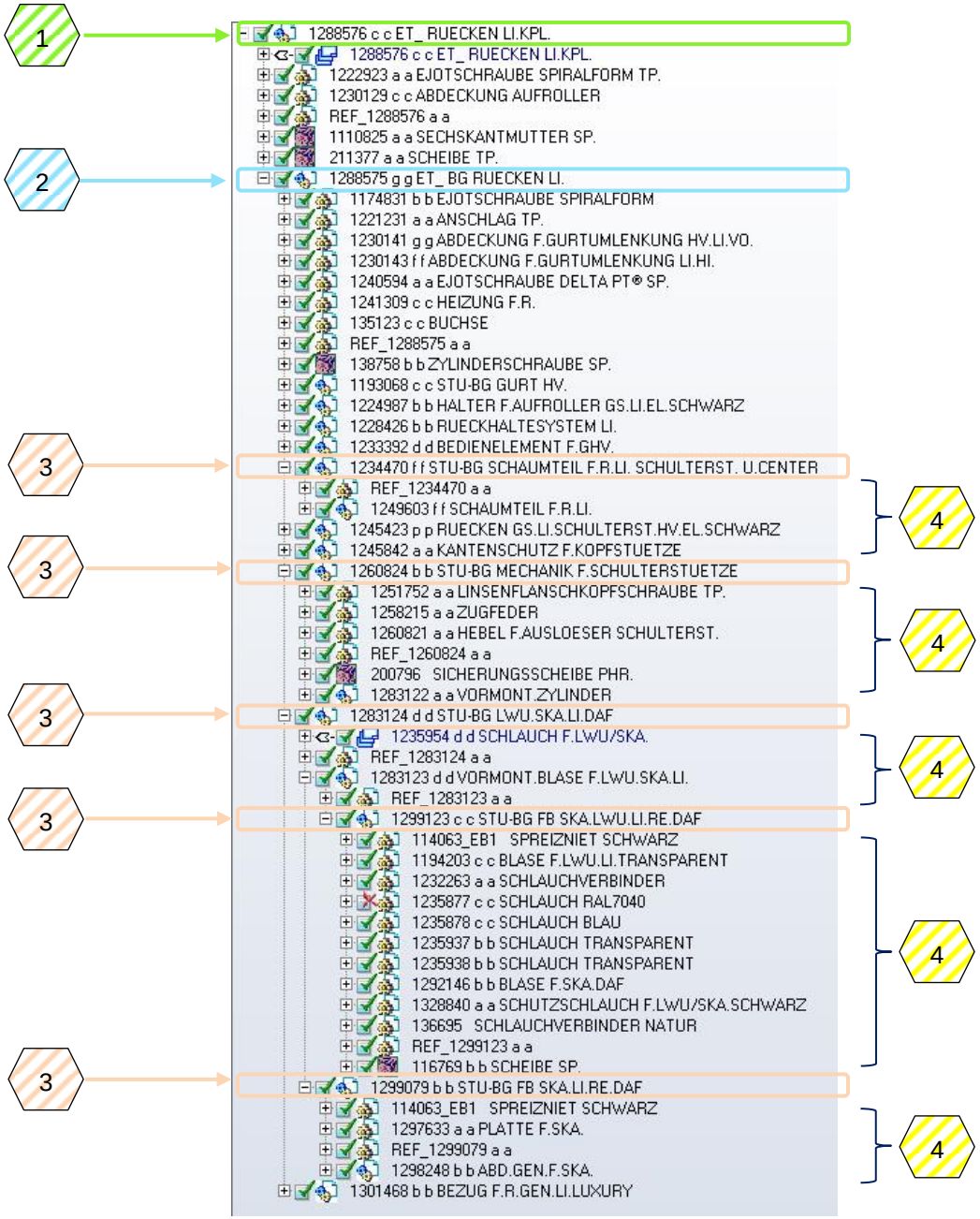
1
2
3
3
3
3
3
4
4
4
4
4
1288576 c c ET_ RUECKEN LI.KPL.
1288576 c c ET_ RUECKEN LI.KPL.
1222923 a a EJOTSCHRAUBE SPIRALFORM TP.
1230129 c c ABDECKUNG AUFROLLER
REF_1288576 a a
1110825 a a SECHSKANTMUTTER SP.
211377 a a SCHEIBE TP.
1288575 g g ET_ BG RUECKEN LI.
1174831 b b EJOTSCHRAUBE SPIRALFORM
1221231 a a ANSCHLAG TP.
1230141 g g ABDECKUNG F.GURTUMLENKUNG HV.LI.VO.
1230143 f f ABDECKUNG F.GURTUMLENKUNG LI.HI.
1240594 a a EJOTSCHRAUBE DELTA PT® SP.
1241309 c c HEIZUNG F.R.
135123 c c BUCHSE
REF_1288575 a a
138758 b b ZYLINDERSCHRAUBE SP.
1193068 c c STU-BG GURT HV.
1224987 b b HALTER F.AUFROLLER GS.LI.EL.SCHWARZ
1228426 b b RUECKHALTESYSTEM LI.
1233392 d d BEDIENELEMENT F.GHV.
1234470 f f STU-BG SCHAUMTEIL F.R.LI. SCHULTERST. U.CENTER
REF_1234470 a a
1249603 f f SCHAUMTEIL F.R.LI.
1245423 p p RUECKEN GS.LI.SCHULTERST.HV.EL.SCHWARZ
1245842 a a KANTENSCHUTZ F.KOPFSTUETZE
1260824 b b STU-BG MECHANIK F.SCHULTERSTUETZE
1251752 a a LINSENFLANSCHKOPFSCHRAUBE TP.
1258215 a a ZUGFEDER
1260821 a a HEBEL F.AUSLOESER SCHULTERST.
REF_1260824 a a
200796 SICHERUNGSSCHEIBE PHR.
1283122 a a VORMONT.ZYLINDER
1283124 d d STU-BG LWU.SKA.LI.DAF
1235954 d d SCHLAUCH F.LWU/SKA.
REF_1283124 a a
1283123 d d VORMONT.BLASE F.LWU.SKA.LI.
REF_1283123 a a
1299123 c c STU-BG FB SKA.LWU.LI.RE.DAF
114063_EB1 SPREIZNIET SCHWARZ
1194203 c c BLASE F.LWU.LI.TRANSPARENT
1232263 a a SCHLAUCHVERBINDER
1235877 c c SCHLAUCH RAL7040
1235878 c c SCHLAUCH BLAU
1235937 b b SCHLAUCH TRANSPARENT
1235938 b b SCHLAUCH TRANSPARENT
1292146 b b BLASE F.SKA.DAF
1328840 a a SCHUTZSCHLAUCH F.LWU/SKA.SCHWARZ
136695 SCHLAUCHVERBINDER NATUR
REF_1299123 a a
116769 b b SCHEIBE SP.
1299079 b b STU-BG FB SKA.LI.RE.DAF
114063_EB1 SPREIZNIET SCHWARZ
1297633 a a PLATTE F.SKA.
REF_1299079 a a
1298248 b b ABD.GEN.F.SKA.
1301468 b b BEZUG F.R.GEN.LI.LUXURY

Figure 8.5.1
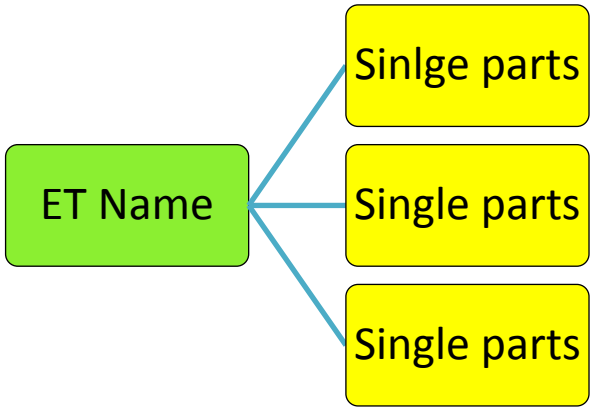
8.6 Diagram of structure and layout of the ET assemblies in the Offroad product range