Work Instruction

015 Research + Development
Assembly Instructions
W_015_023

created	04.03.2013	Nindl Eduard
proved	18.03.2013	Leger Gerhard
released	21.03.2013	Bauer Rupert / List Ronald
Revision 00	03/2013	

1 Purpose

This work instruction regulates the procedures regarding the design, preparation, verification and archiving of GRAMMER AG assembly instructions for spare parts.

2 Scope

GRAMMER R&D worldwide

3 Terminology

None

4 Responsibilities

The implementation of and compliance with this work instruction are the responsibility of the vice president R&D.

5 Description

5.1 Why assembly instructions?

GRAMMER AG is legally obliged to ensure that repairs to and conversion work on its products can be carried out accurately and without any risk to the person performing this work (obligation to instruct). These assembly instructions are intended to prevent any risks and must therefore, in particular, comprise the following requirements and comply with the statutory and non-statutory obligations, such as standards, etc., which have to be observed by GRAMMER AG:

- safety instructions to prevent accidents at work
- notes indicating possible risks to persons during repair work and concerning the prevention of these risks
- notes indicating possible damage to material and concerning the prevention of this damage
- notes regarding the use of oil, grease and other chemical substances
- necessary preparatory work
- description regarding the removal and installation of parts and assemblies
- information on compliance with specific torque requirements, e.g. for seatbelts

5.2 Who needs assembly instructions?

Any person repairing our seats or carrying out conversion or retrofitting work.

These are representatives in the service organisations of the OEMs as well as their mechanics in specialist workshops or our VIP dealers and their retailers (vendors) as well as, if applicable, specialist personnel in the OEM organisations who are in charge of rework.

The assembly instructions must indicate particularly that persons who lack the necessary knowledge or who have not been trained adequately for this work are not allowed to carry out repair work on GRAMMER products.

Moreover, they must also indicate that GRAMMER AG will not assume any guarantee or liability for material damage or injuries resulting, for example, from non-observance of the assembly instructions and/or from improper assembly work.

Assembly instructions are needed for retrofit and spare parts if:

- they are to be retrofitted into seats that are already in use.
- installation is not possible without instructions (e.g. if additional holes need to be made)
- improper installation may cause dangerous situations (accidents, injuries).
- highly complex spare part assemblies are delivered, e.g. with several assembly variants and versions (old – new)

Assembly instructions are required in these cases, especially for safety-relevant components, in compliance with the obligation to instruct.

A copy of the assembly instructions is enclosed with the corresponding spare parts kits.

5.3 Preparation of assembly instructions

These documents shall be prepared by external service providers who are able to ensure that the repair processes are described in a universally understandable manner due to their neutrality or by employees of GRAMMER AG's R&D department.
If external companies are used, a non-disclosure contract shall be concluded with them.

The assembly instructions shall be prepared as a WORD file in A4 or A3 landscape format (page / chapter information and headers / footers).
Smaller or larger formats are not used because they are hard to read or would have to be folded several times depending on the size of the packaging of the spare parts.

Besides the product in question (current version), GRAMMER AG shall provide the following documents for the preparation of the assembly instructions:

- spare parts lists and spare parts drawings
- assembly drawing and manufacturing parts list (level 1)
- drawings of individual parts, if applicable
- corresponding technical information for electrical and pneumatic components
- all information regarding stability, tightening torques and other specifications
- notes on special screws and their properties (e.g. seatbelt screws)
- notes on the use and description of special tools

Assembly instructions shall be written in GERMAN and ENGLISH.

5.4 Verification

Once the first draft has been completed, R&D shall receive a proof copy in German from the external service providers, which shall be checked in terms of its factual correctness.

For this factual verification, Central Claim Management shall be consulted. The corresponding time required for this factual verification shall be scheduled and taken into consideration.

If Central Claim Management is not familiar yet with the components described in the assembly instructions because the instructions relate to new designs, for example, the corresponding designer and the corresponding employee of prototype manufacturing (CC) shall be consulted for the factual verification.

The instructions shall be translated only once the German text has been verified and released in writing or any corrections have been made.

5.5 Layout of the assembly instructions

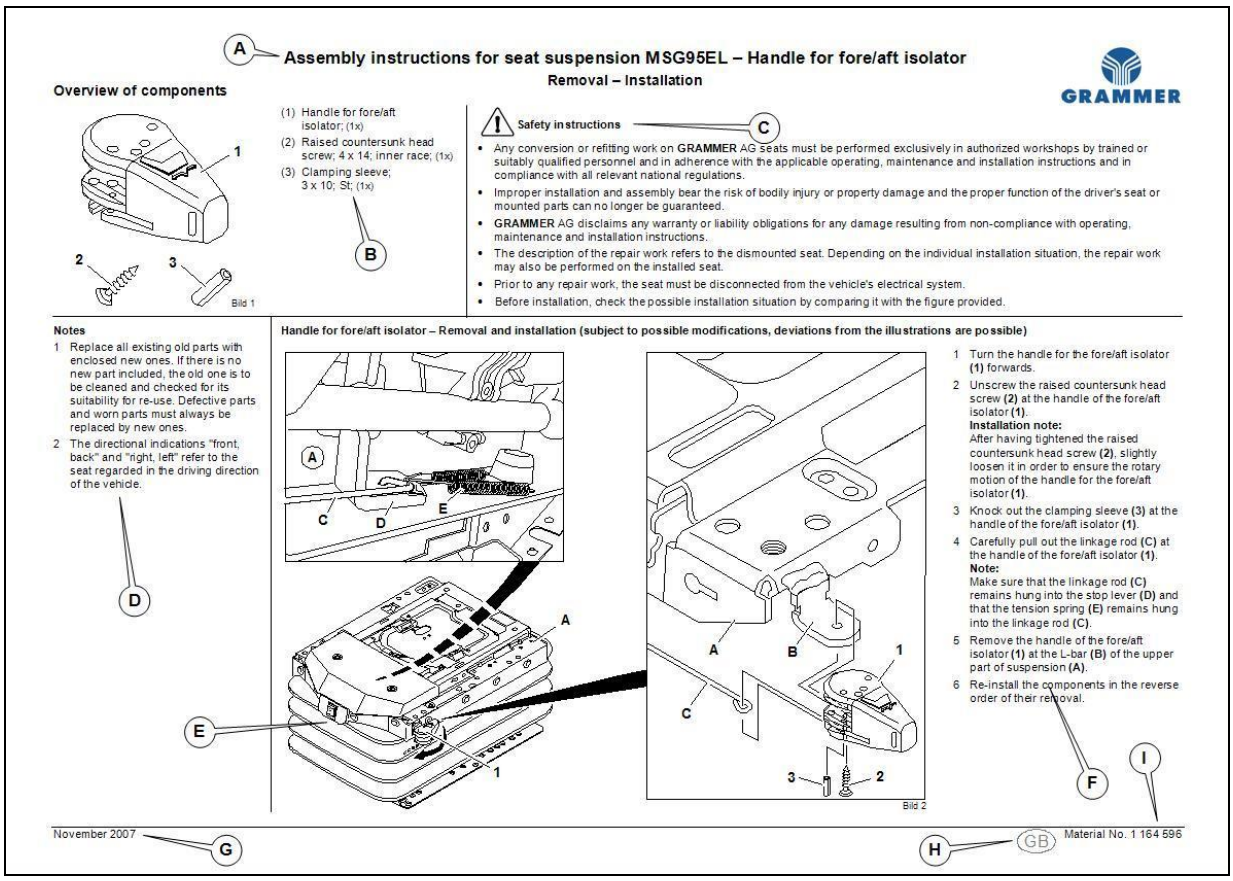

A Assembly instructions for seat suspension MSG95EL – Handle for fore/aft isolator

Removal – Installation

Overview of components

(1) Handle for fore/aft isolator; (1x)
(2) Raised countersunk head screw; 4 x 14; inner race; (1x)
(3) Clamping sleeve; 3 x 10; St; (1x)

B

Bild 1

Safety instructions C

- Any conversion or refitting work on **GRAMMER** AG seats must be performed exclusively in authorized workshops by trained or suitably qualified personnel and in adherence with the applicable operating, maintenance and installation instructions and in compliance with all relevant national regulations.
- Improper installation and assembly bear the risk of bodily injury or property damage and the proper function of the driver's seat or mounted parts can no longer be guaranteed.
- **GRAMMER** AG disclaims any warranty or liability obligations for any damage resulting from non-compliance with operating, maintenance and installation instructions.
- The description of the repair work refers to the dismounted seat. Depending on the individual installation situation, the repair work may also be performed on the installed seat.
- Prior to any repair work, the seat must be disconnected from the vehicle's electrical system.
- Before installation, check the possible installation situation by comparing it with the figure provided.

Notes

1 Replace all existing old parts with enclosed new ones. If there is no new part included, the old one is to be cleaned and checked for its suitability for re-use. Defective parts and worn parts must always be replaced by new ones.
2 The directional indications "front, back" and "right, left" refer to the seat regarded in the driving direction of the vehicle.

D

Handle for fore/aft isolator – Removal and installation (subject to possible modifications, deviations from the illustrations are possible)

E

Bild 2

1 Turn the handle for the fore/aft isolator **(1)** forwards.
2 Unscrew the raised countersunk head screw **(2)** at the handle of the fore/aft isolator **(1)**.
Installation note:
After having tightened the raised countersunk head screw **(2)**, slightly loosen it in order to ensure the rotary motion of the handle for the fore/aft isolator **(1)**.
3 Knock out the clamping sleeve **(3)** at the handle of the fore/aft isolator **(1)**.
4 Carefully pull out the linkage rod **(C)** at the handle of the fore/aft isolator **(1)**.
Note:
Make sure that the linkage rod **(C)** remains hung into the stop lever **(D)** and that the tension spring **(E)** remains hung into the linkage rod **(C)**.
5 Remove the handle of the fore/aft isolator **(1)** at the L-bar **(B)** of the upper part of suspension **(A)**.
6 Re-install the components in the reverse order of their removal.

F I

November 2007 G

H GB Material No. 1 164 596

A Title / designation
B Parts overview / list of parts contained in the spare parts kit
C Safety instructions
D General information (use of parts old / new; necessary preparatory work; information on specific hazards, etc.)
E Illustration of the repair environment
F Description of the repair process
G Validity status (month/year of creation or update in the event of revisions)
H Language identification (page 1 = **D** for German, page 2 = **GB** for English)
I Number of the assembly instructions with revision status (e.g. 1 164 596_a)

*The description is of the removal process. Components are installed in the reverse order.

5.6 Document data

5.6.1 Archiving in the system archive

Criteria for archiving:	DOCUMENT PART	**001** = GERMAN / ENGLISH (applies to a document and not to the page number)
	DOCUMENT TYPE	**MA** (assembly instructions)
	DMS_Z_WERKNR	e.g. **1010**
	DMS_Z_PRODUKTBEREICH	**Driver's seat**
	PRODUCT LINE	e.g. **MSG95AL** (seat type line)
	DMS_Z_FORMAT	**A4 / A3**
	DOCUMENT VERSION	e.g. **A** (index / revision status)
	DOCUMENT STATUS	e.g. **FR** or **UN** (released / invalid)
	DESCRIPTION	Additional description for clarification if necessary
	DMS_Z_AENR	**T01-XXX-XX**
	DMS_Z_HERKUNFT	**WORD**

The assembly instructions can be opened in the drawing archive (DMS) as a PDF or DOC file.

In the basic data, assembly instructions are recorded as the material type "HALB" (semi-finished products).

5.6.2 Drawing data

Document type	**MA** (assembly instructions)
Doc version	**(revision status / index)**
Page format	**4 / 3**
No. sheets	**1** (not page number)

5.6.3 Series-production documents

In the parts list of the spare parts kit the assembly instructions are listed as a genuine part.

Material	1232589		Alt.	Usage	1
	HANDLE F.FAI.CPL.			Valid	26.08.2010
Reqd qty	1,000 PC	Base quant		1,000 PC	

Lv	Item	Component no. / Description	Quant	Un	Ict	Asm Ex.
1	0010	200025 TYPE PLATE	1,000	PC	L	☑
1	0020	104373 PE-PLASTIC BAG 120X 185X 0,07 MM	1,000	PC	L	☐
1	0030	110468 LOCKING SLEEVE	1,000	PC	L	☑
1	0040	132414 EJOT SCREW DELTA PT® TP.	1,000	PC	L	☐
1	0050	1164596 ASSEMBLY DRAWING FOR GRIP	1,000	PC	L	☐
1	0060	1216661 HANDLE F.FAI.DEEP BROWN	1,000	PC	L	☐

6 Applicable documents

7 Changes