Work Instruction

015 Research + Development

Homologations

W_015_009

1 Purpose

Structure and filing of homologation documents

2 Scope

R&D Global

3 Terminology

None

4 Responsibilities

The Vice President R&D is responsible for the execution of, and compliance with, this Work Instruction.

Performance of the homologation is generally carried out in coordination with the Testing Department in the Competence Center (CC).

5 Description

Seven digit article numbers are issued from SAP for the homologation drawings.
Approval takes place through SmarTeam workflow and thus also automatic transfer to SAP-DVS.

Possible deviations due to customer requests (Commercial Vehicles / Division Truck). This is possible after prior consultation with CAD Engineering Services. A corresponding note is to be entered in the Profile Card of the homologation drawing. The "Comment" field is to be used for this. (e.g. "Deviation according to customer request")

Documents/drawings shall be provided to the checker, depending on the type of test:

- ➔ *An exact description of the **drawings** to be provided by R&D is shown in chapter 8 or 10.*
- ➔ *All other **documents** required are to be provided from the test department (Competence Center).*
  An exact description of the documents to be provided is shown in chapter 7 or 9.

All homologation documents which were sent from the Testing Department (CC) to an accredited test centre (TÜV, Dekra etc.) and sent back approved, are archived by the Testing Department (CC) on drive "\\hassfs02\cadhas\Homologationen".

6 *Creation of homologation drawings, regardless of the test type or the product area.*

- *All homologation drawings must be created using the Catia Standard "AZ_MZ_GAG_V1_0". The font heights etc. are defined in this standard and must not be changed.*
- *Homologation drawings of the individual parts of strength-relevant/vibration-relevant components and their variants (e.g. adjustable/non adjustable shock absorbers, air suspension, tension springs, auxiliary volume).*
- ***It is not permitted to indicate tolerances for dimensions on homologation drawings! This also applies to the CatiaV5 catalogue element "Technology block AZ".***
- *In the Profile Card (SmarTeam) the part number of the model, which serves as reference (part/drawing number of the series component), must be entered under "Put down by / similar".*
- *All types of homologation drawings have an independent part number, the 3D geometry must have **no link/consistency** with the series parts.*
- *Dummy numbers (e.g.VA numbers) are not allowed, since no approval has taken place in this case and the note in the title block header "in modification" is included.*
- *The entry of special characteristics (SC/CC) is not allowed. The reference to the SC/CC characteristics via the GRAMMER text headers must be HIDDEN on the homologation drawings!*
- ***<u>No indices</u>** are specified in the drawing area. (Only in the title block)*
- *The drawing type for homologation drawings is "**HO**", regardless of which CAD system it is generated with.*
- *In SAP, the document type is called "HOM" and is stored as SAP material type "ZEICH".*
- *Language on drawings see W_015_007 in GBS. Possible deviations due to customer requests (Commercial Vehicles / Division Truck).*
- Homologation documents do not have to be checked by *the* welding engineer, since they are taken over in the original (with possibly reduced dimensions) from the series part, i.e. "GS" must not appear in the name. General tolerances and tolerances must not be specified.
- The naming on the homologation drawing *or the drawing type* of assemblies is taken directly from series parts (apart from "GS."). Surface treatment must not be specified.

*The **naming of homologation drawings for complete seats** is regulated differently for the product areas. See chapter 8 or 10.*

7 Creation of the documentation and application for type approvals according to “(EU) Ordinance No. 1322/2014” (“Offroad”)

Test procedure in the Testing Department in the Competence Center (CC):

Application for a type approval from the Kraftfahrt-Bundesamt / German Federal Motor Transport Authority (KBA).

For this purpose, the completed "Merkblatt zur Anfangsbewertung (MAB) / Initial Assessment Fact Sheet, Chapter 9" (.pdf) form 9.1 “Antrag auf Erteilung einer Typgenehmigung / Application for type approval” is sent to the Kraftfahrt-Bundesam (KBA).

The KBA will provide a provisional type-approval number in response.

Ordering a driver’s seat test for type approval in accordance with Ordinance (EU) 1322/2014 from a KBA Technical test centre.
For example, this test can be carried out by DLG TestService GmbH, in Gross-Umstadt.

To do this, a letter is to be submitted to the technical test centre containing the following information:

- *Basic seat type and seat variants,*
- *the pre-approval type number*

  and our

- *Grammer order number*

*Additionally, the “**Information document No.: 1322/2014**“ must be completed and sent to a Technical test centre.*

Structure of the documents for the information document:

- *Sheet 1-4* *General details*
- *Sheet 5* *Production sites*
- *Sheet 6* *Dimensions of the driver seat*
- *Sheet 7* *Main characteristics of the driver seat*
- *Sheet 8* *Overview of the annexes*
- *Sheet 9* *Change description*
- *Sheet 10 to…* *Annexes (photo documentation 45° from front / 45° from rear)*

Furthermore a separate drawing set with all the homologation drawings in PDF format is to be sent to a Technical test centre.

8 Documentation → Testing according to "(EU) Ordinance No. 1322/2014" ("Offroad")

Obtaining type-approval of agricultural and forestry vehicles ("Offroad") in accordance with "(EU) ordinance No. 1322/2014":

Naming the seat type in the technical data sheet (Kraftfahrt-Bundesamt / Federal Office for Motor Traffic / KBA):
e.g. "MSG95AL/741-00-00-W2"

Where the first "-00" block describes the type of the suspension
and the second "-00" block describes the design variants of the seat top.
The subsequent naming "-W2" or "-W3" stands for the vibration classes.

For example: Next seat variant "MSG95AL/741-**01**-00-W2" (-**01** other suspension characteristic)
For example: Next seat variant "MSG95AL/741-00-**01**-W2" (-**01** another design of the seat top)

*The naming "…**-00-"** or "…/00" will be continued on a sequential basis per seat variant.*

Naming the seat designs on the drawings:
e.g. "MSG95AL/741-00/00"

where the first "-00" block describes the type of the suspension
and the second "/ -00" block for the type of the seat top.

For example: Next seat variant "MSG95AL/741-**01**/00" (-**01** other suspension characteristic).
For example: Next seat variant "MSG95AL/741-00/**01**" (-**01** another design of the seat top).

The designations "…**-00"** or "…**/00"** are consecutively numbered for each seat model.

The following drawings are required to apply for a test according to "(EU) Ordinance No. 1322/2014":

- *Homologation drawing of the complete seat, drawing type "HO" (see 8.1)*
- *Series drawings of individual parts (see 8.2)*

8.1 Homologation drawing of the complete seat
→ Testing according to “(EU) Ordinance No. 1322/2014” (“Offroad”).

This drawing is displayed like an offer drawing.

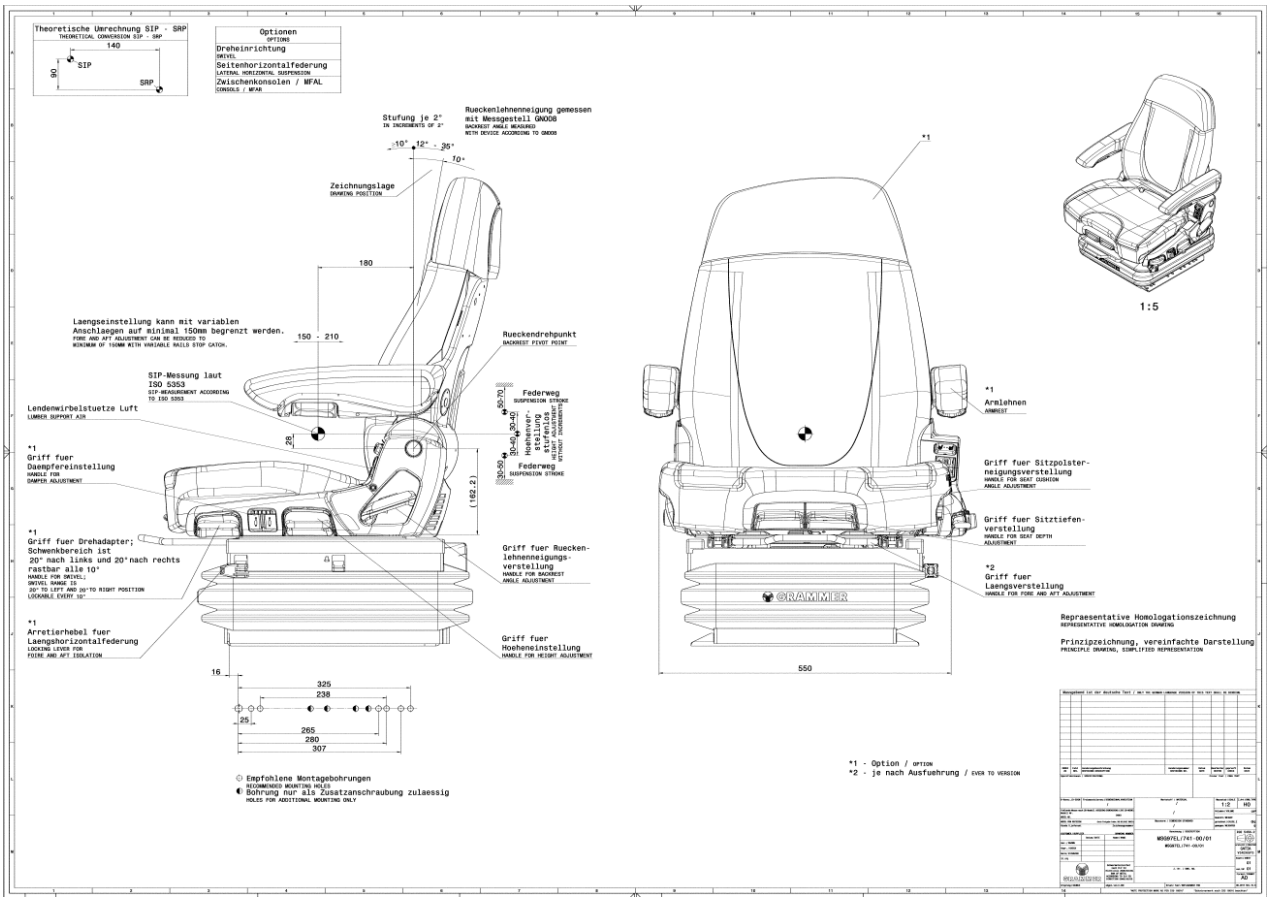

The following CatiaV5 catalogue elements are to be inserted on the homologation drawing for a complete seat, which are tested according to "(EU) Ordinance No. 1322/2014" ("Offroad").

- THEORETICAL CONVERSION SIP - SRP

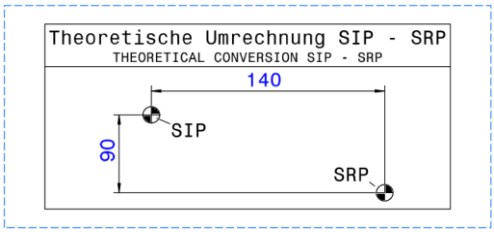

- SIP-MEASUREMENT ACCORDING TO ISO 5353

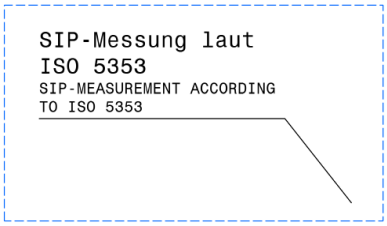

- REPRESENTATIVE HOMOLOGATION DRAWING
  PRINCIPLE DRAWING, SIMPLIFIED REPRESENTATION

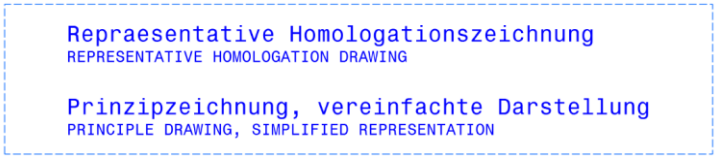

In homologation drawings the SIP (circle with 2x ¼ shaded areas) must always be specified.
Also see Chapter 13.

A 1:2 scale front and side view are shown on the drawing sheet1.

A reduced (1:5) Axono view is required for offroad seats.

The SIP (seat index point) must always be measured in relation to the seat top, i.e. a clear reference point must be indicated on the seat top, preferably the backrest pivot point (or alternatively the seatbelt attachment point). However, *this reference point* must be clearly accessible for measurement.

The height adjustment ranges or the suspension travel and the fore/aft adjustment are to be dimensioned from the SIP of the seat top.
These movements must be specified as minimum and maximum values.
(e.g. height adjustment 60 - 100 mm)
(e.g. suspension travel 80 – 120 mm)
(e.g. fore/aft adjustment 150 - 210 mm)

When specifying the fore/aft adjustment, the following note must be given:
“The fore/aft adjustment can be limited to a minimum of 150 mm by variable stops".

The adjustment angle (backrest, seat angle) is to be specified in ± °.

The seat cushion inclination is to be specified, starting from the horizontal tilt adjustment.

The seat cushion width dimension, measured 150 mm in front of the SRP, is to be specified with the note

The drilling pattern should be dimensioned starting from a traceable point on the suspension.

The representation of the seat should correspond to a basic variant.
Optional features (e.g. swivels etc.) should be done in tabular form.

The controls (handles and adjustments) are not strength-relevant/vibration-relevant parts.
they therefore do not need to be described in further detail.

Possible attachments such as armrests, headrests or backrest extensions are to be shown using dotted lines and dimensioned, if necessary.

8.2 Series drawing(s) - Components
Use of the series drawings of springs, shock absorbers and additional volume, if required.

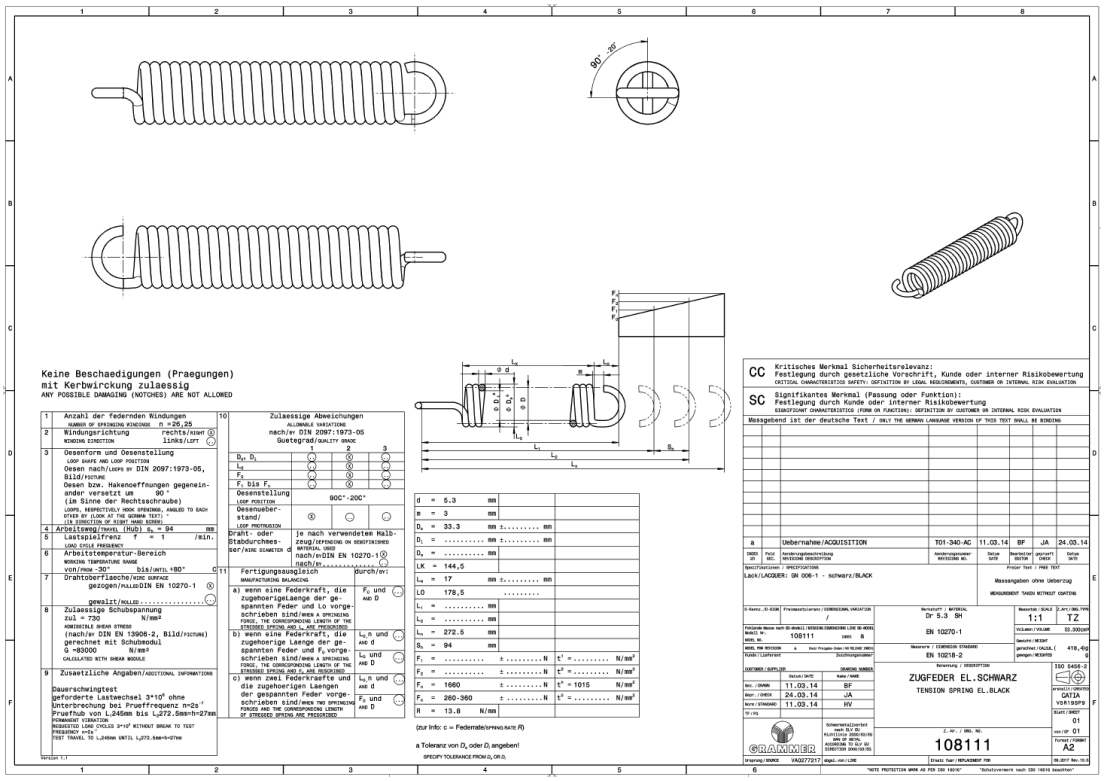

9 Creation of the documentation and application for type approvals according to “ECE-R14 / ECE-R17” (“Truck”)

Test procedure in the Testing Department in the Competence Center (CC):

In the truck sector, the term "homologation" must be used to obtain a test report from an accredited test centre in accordance with ECE-R14 / ECE R17 (e.g. TÜV, DEKRA).

The documentation is to be structured as follows:

A heading is to be used to name the documentation, from which is the status of the documentation is visible, so for example, for a new registration “TÜV - Documentation - 00”
for a subsequent update of the documentation “TÜV - Documentation - 01“

- *Sheet 1 (cover sheet) Seat designation with naming the customer and seat view*
- *Sheet 2 Table description*
- *Sheet 3 Table of contents*
- *Sheet 4 Change description*
- *Sheet 5 Offer drawing*
- *Sheet 6 Setting parameters*
- *Sheet 7 Assembly drawing*
- *Sheet 8 and ongoing sheets: Series drawing(s) of power-bearing assemblies and individual parts Sequence starting from the top, i.e. backrest, backrest locks, seat holder, etc.*

ABE (Allgemeine Betriebserlaubnis / General type approval) is an amended document of an approved homologation document and is enclosed with the respective seat type (similar to installation guide). ABEs are administered using seven digit SAP numbers and placed directly in the SAP-DVS by the respective development department. The corresponding authorisations in SAP (to be able to create these documents) must be requested by the respective R&D department from the central SAP department.
Document type in SAP is “ABE”. ABE’s are only created for the bus and truck sector.

10 Documentation → testing according to "ECE-R14 / ECE-R17" ("Truck")

Specification of the seat type (e.g. MSG115/933 or MSG100/933; ….-01) in the title block under "Description".

The following drawings are required to apply for a test report according to "ECE-R14 / ECE-R17":

- *Offer drawing (series drawing) of the complete seat (See 10.1)*
- *Homologation drawing of the setting parameters (See 10.2)*
- *Homologation drawing of the assembly drawing (See 10.3)*
- *Homologation drawings of force-transmitting assemblies and individual parts (See 10.4)*

Note: The special customer offer drawing should be used for unique customer-related homologations (such as for DAF).
For a general homologation, not assigned to a specific customer, (such as for sales) a neutral offer drawing should be created.

10.1 Offer drawing (series drawing) of the complete seat → test according to “ECE-R14 / ECE-R17” (“Truck”)

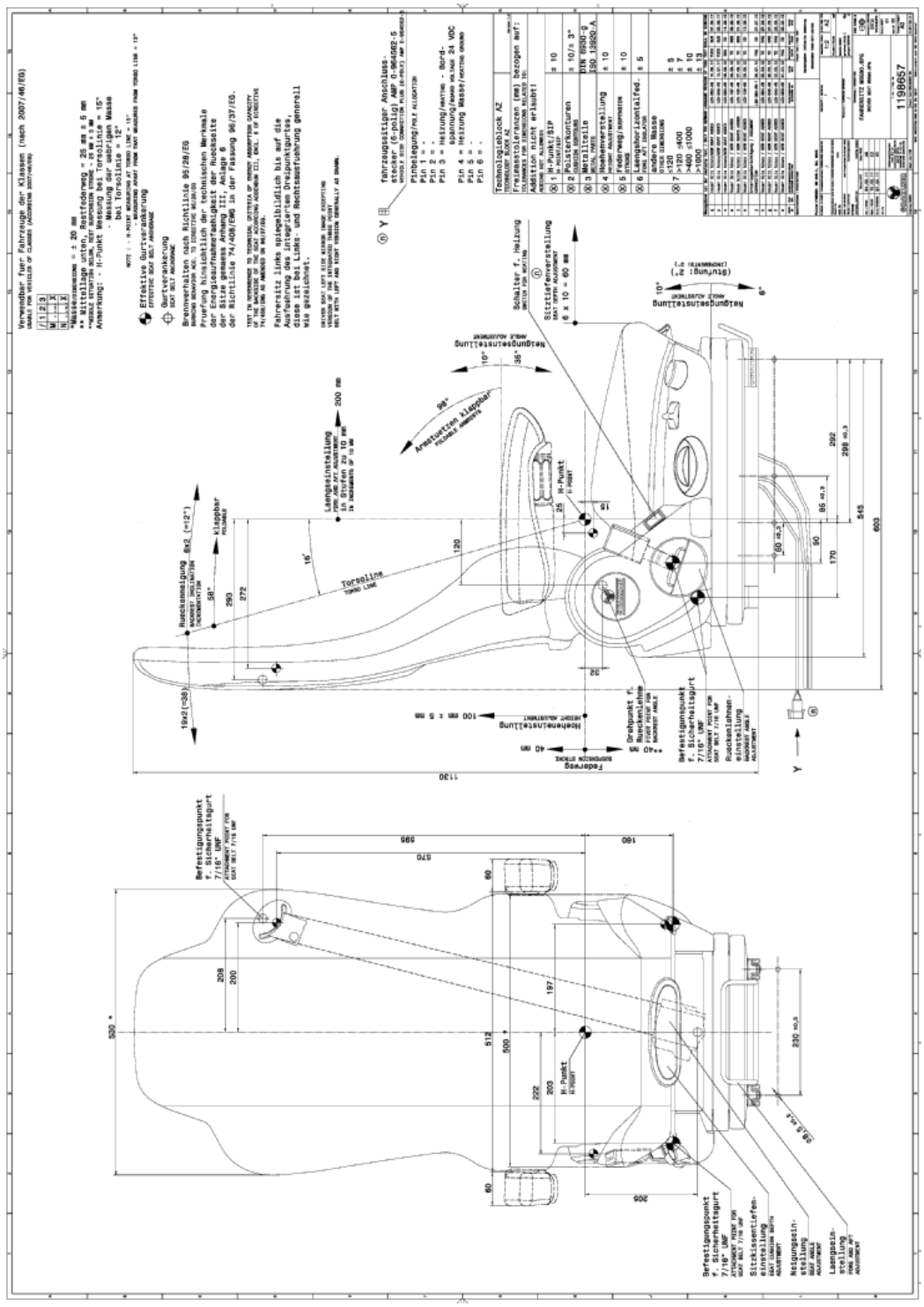

10.2 Homologation drawing of the setting parameters → test according to "ECE-R14 / ECE-R17" ("Truck")

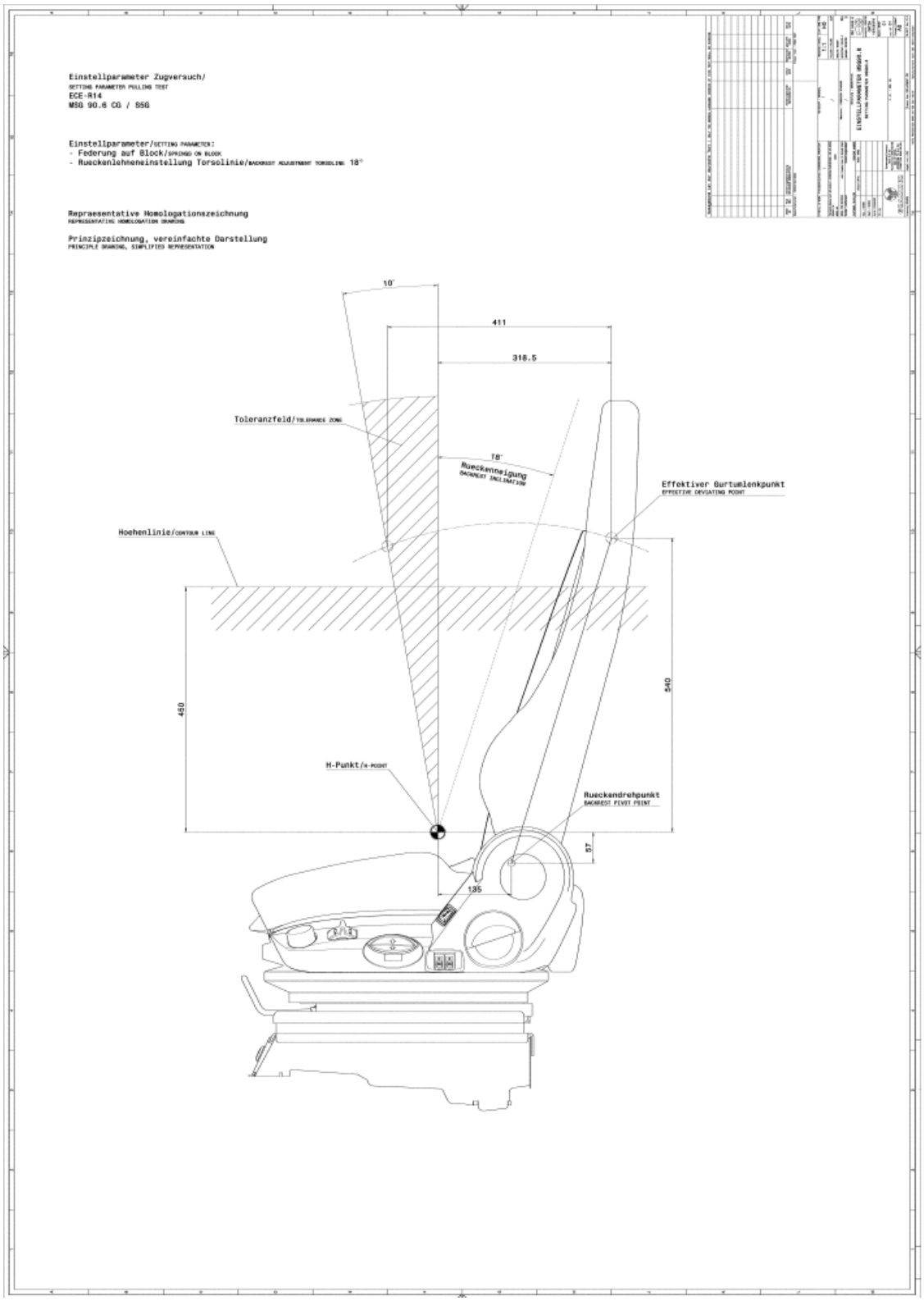

10.3 Homologation drawing of the complete seat → test according to “ECE-R14 / ECE-R17” (“Truck”).

Pos. POS.	Menge Quantity	Benennung DESCRIPTION	Abmessung Dimension	Werkstoff Material	Norm Standard
1	1	Federungs-UT/SUSPENSION LP.	siehe/SEE 1145479		
2	1	Schwinge/SCISSOR	siehe/SEE 1142867		
3	1	Federungs-OT/SUSPENSION UP.	siehe/SEE 1143110		
4	1	Sitztraeger/SEAT SUPPORT	siehe/SEE 1143266		
5	1	Ruecken/BACKREST	siehe/SEE 1143700		
6	2	Bolzen/BOLT	Ø19,9/Ø14x15	11SMn37	DIN EN 10277-3
7	3	Niet/RIVET	Ø6	Stahl/STEEL	
8	2	Schraube/SCREW	Ø6x14	Stahl/STEEL	EJOT
9	2	Hebel/LEVER	Ø10	ZP0430/ZP2	DIN EN 12844
10	2	Sperre/BAR LOCK	-	11SMnPb30+C	DIN EN 10277-3
11	2	Lagerbock/BEARING BLOCK	-	ZP0430/ZP2	DIN EN 12844
12	4	Distanzstueck/SPACER	25.5x15.6x1.95	PA66+PA6/6T-GF60	Grivory GV-6H
13	1	Gehaeuse-OT/HOUSING LP.	-	PA6-GF30	DIN EN ISO 1874-1
14	2	Klinke/LATCH	130.5x8x4	ZP0410	DIN EN 12844
15	1	Gehaeuse/HOUSING	-	PA6-GF30	DIN EN ISO 1874-1
16	1	Sicherheitsgurt/SECURITY BELT	siehe Zulassung SEE APPROVAL		
17	1	Gurtschloss/BUCKLE	siehe Zulassung SEE APPROVAL		
18	1	Schraube/SCREW	7/16-20UNF	8.8	DIN EN ISO 898-1
19	1	Schraube/SCREW	7/16-20UNF	8.8	DIN EN ISO 898-1
20	6(4)	Rolle/ROLLER	Ø25.5x8	POM	PTFE10 S12
21	2	Bolzen/BOLT	Ø12	S235JRG2C+C	DIN EN 10277-2
22	2(4)	Schraube/SCREW	M8x40	8.8	DIN EN ISO 898-1
23	2(4)	Rohr/TUBE	Ø12x1.75x25	E235+C	DIN EN 10305-2
24	2(4)	Lager/BEARING	37x20x25	PA 6.6	DIN EN ISO 1874-1
25	2(4)	Mutter/NUT	M8	8	DIN EN 20898-2
26	1	Gurtschutzblech/RETRACTOR PLATE	-	Stahl/STEEL	

Repraesentative Homologationszeichnung
REPRESENTATIVE HOMOLOGATION DRAWING

Prinzipzeichnung, vereinfachte Darstellung
PRINCIPLE DRAWING, SIMPLIFIED REPRESENTATION

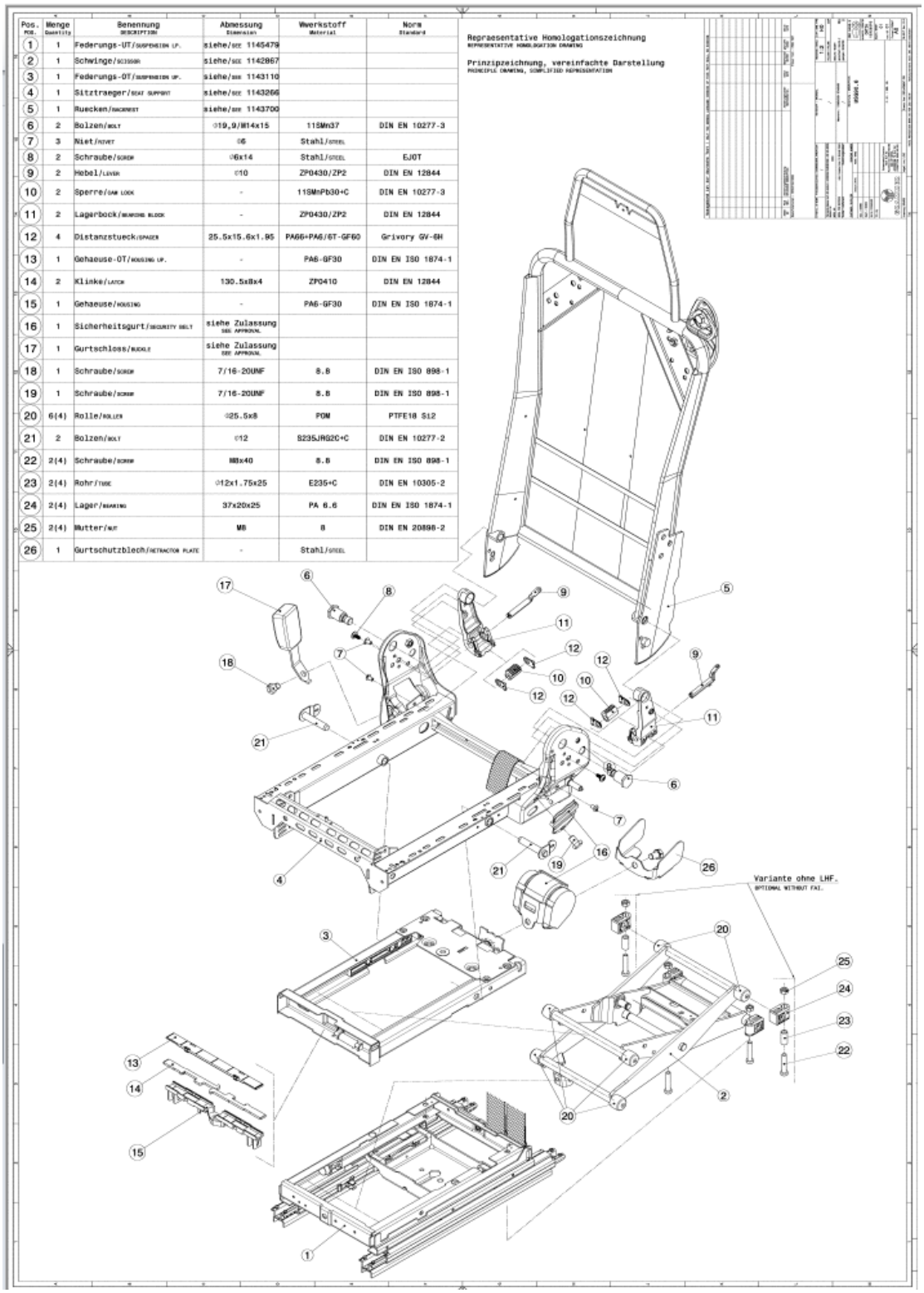

10.4 Homologation drawing(s) of assemblies.

This drawing/these drawings is/are shown as an assembly drawing/assemblies drawing.

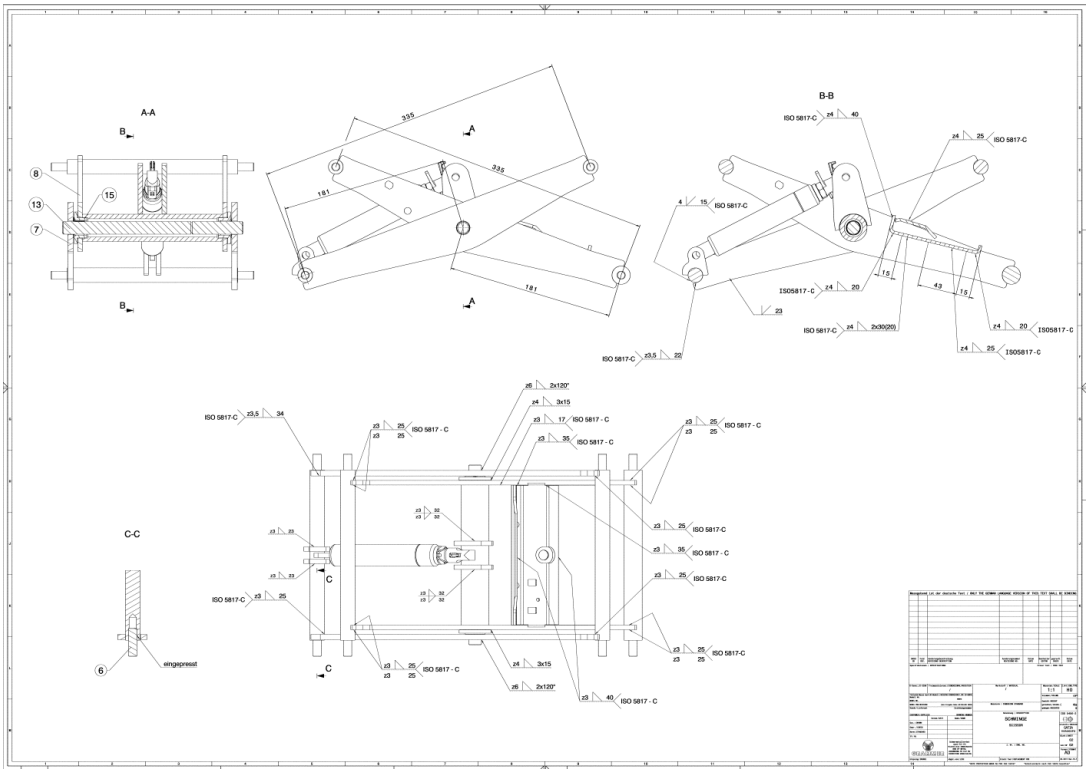

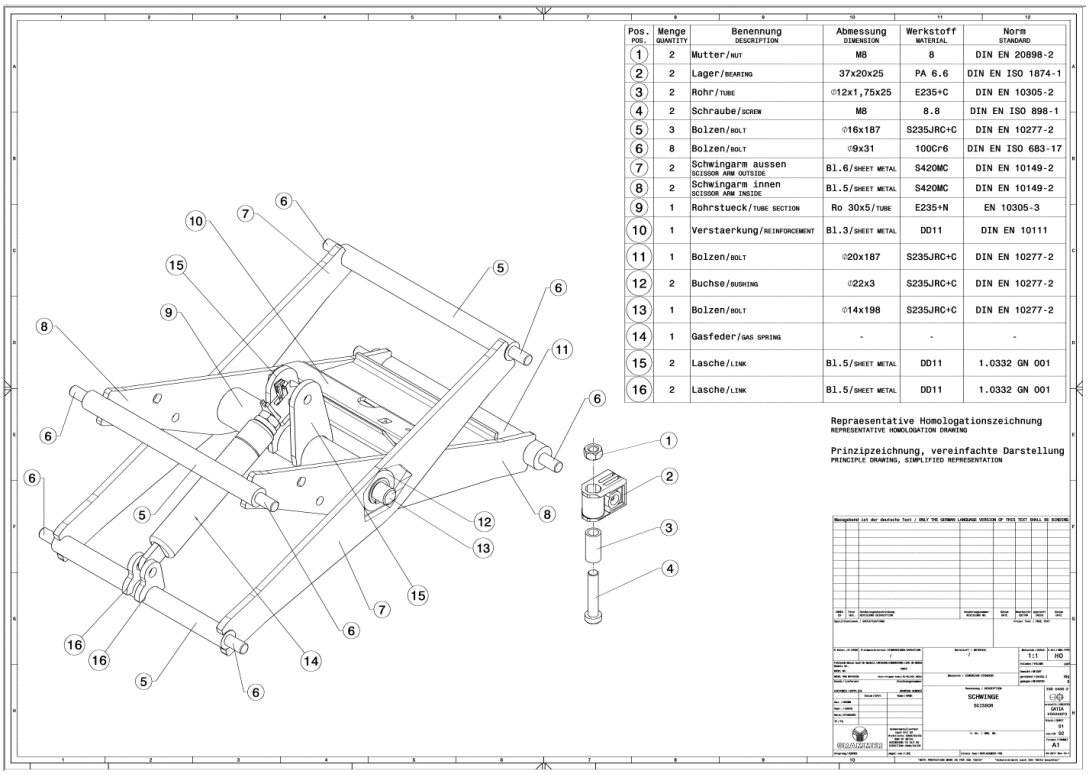

Pos. POS.	Menge QUANTITY	Benennung DESCRIPTION	Abmessung DIMENSION	Werkstoff MATERIAL	Norm STANDARD
1	2	Mutter/NUT	M8	8	DIN EN 20898-2
2	2	Lager/BEARING	37x20x25	PA 6.6	DIN EN ISO 1874-1
3	2	Rohr/TUBE	Ø12x1,75x25	E235+C	DIN EN 10305-2
4	2	Schraube/SCREW	M8	8.8	DIN EN ISO 898-1
5	3	Bolzen/BOLT	Ø16x187	S235JRC+C	DIN EN 10277-2
6	8	Bolzen/BOLT	Ø9x31	100Cr6	DIN EN ISO 683-17
7	2	Schwingarm aussen SCISSOR ARM OUTSIDE	Bl.6/SHEET METAL	S420MC	DIN EN 10149-2
8	2	Schwingarm innen SCISSOR ARM INSIDE	Bl.5/SHEET METAL	S420MC	DIN EN 10149-2
9	1	Rohrstueck/TUBE SECTION	Ro 30x5/TUBE	E235+N	EN 10305-3
10	1	Verstaerkung/REINFORCEMENT	Bl.3/SHEET METAL	DD11	DIN EN 10111
11	1	Bolzen/BOLT	Ø20x187	S235JRC+C	DIN EN 10277-2
12	2	Buchse/BUSHING	Ø22x3	S235JRC+C	DIN EN 10277-2
13	1	Bolzen/BOLT	Ø14x198	S235JRC+C	DIN EN 10277-2
14	1	Gasfeder/GAS SPRING	-	-	-
15	2	Lasche/LINK	Bl.5/SHEET METAL	DD11	1.0332 GN 001
16	2	Lasche/LINK	Bl.5/SHEET METAL	DD11	1.0332 GN 001

Repraesentative Homologationszeichnung
REPRESENTATIVE HOMOLOGATION DRAWING

Prinzipzeichnung, vereinfachte Darstellung
PRINCIPLE DRAWING, SIMPLIFIED REPRESENTATION

The following CatiaV5 catalogue element is to be inserted in homologation drawings for a complete seat, setting parameters, etc. Individual parts will be tested according to "ECE-R14 / ECE-R17" ("Truck").

Repraesentative Homologationszeichnung
REPRESENTATIVE HOMOLOGATION DRAWING

Prinzipzeichnung, vereinfachte Darstellung
PRINCIPLE DRAWING, SIMPLIFIED REPRESENTATION

Additionally on homologation drawings for a complete seat or for assemblies a table with the respective position number, naming, dimensions, material etc. of the individual parts (item Nos. are indicated circled on the part) *is required.*

11 Automotive

Homologations are only carried out in special cases at the customer's request and after prior agreement with ***CAD Engineering Services****.*

12 Railway

Homologations are only carried out in special cases at the customer's request and after prior agreement with ***CAD Engineering Services****.*

13 Displaying "H-Point", "SIP", "SRP", and "Attachment point for seat belt" on homologation drawings

The representation of "H-Point", "SIP", "SRP" and "Attachment point for seat belt" is defined on homologation drawings (also on offer drawings) as follows:

"H-Point", "SIP", "SRP" → Hatching of the circle "top right" and "bottom left".

"Attachment point for seat belt" → Hatching of the circle "top left" and "bottom right".

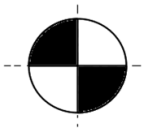

"H-Point", "SIP" and "SRP" are inserted onto the drawing from the 3D model.
The "Attachment point for seatbelt", however, is always added as 2D catalogue element.
The diameter is 25 mm.

14 Homologations for seat systems process diagram

Ablaufschema Homologationen für Sitzsystene

- Competence-Center/ GRAMMER AG –

Erstellt: Stefan Badura
Leiter Competence-Center/ Leiter Standort Immenstetten
Datum: 03.02.2012

© GRAMMER AG, Stefan Badura, Leiter Competence-Center/ Leiter Standort Immenstetten 19.04.2012 Seite 1

Competence-Center - Ablaufschema Homologationen -

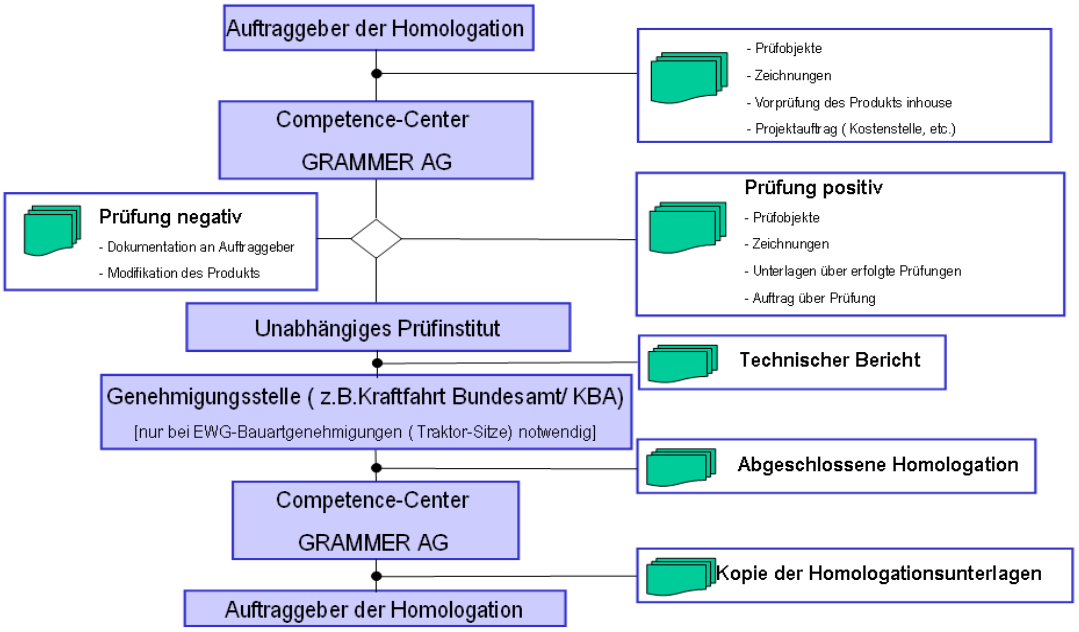

© GRAMMER AG, Stefan Badura, Leiter Competence-Center/ Leiter Standort Immenstetten 19.04.2012 Seite 2

15 Applicable documents

Standardisation_CAD_Drawing standard	W_015_007
Determination and labelling special characteristics	W_015_026

16 Changes

03/2013
Replacement for Revision 00 dated 01/02/2011 due to complete reworking

06/2013
Point 5.2
Point 6

07/2017
Point 5
Point 5.1
Point 5.2
Point 6
New: Point 5.5

09/2017
Point 5
Other applicable documents added

10/2018
Completely revised

03/2019
Point 8.1, 10.2, 10.3, 10.4 Pictures updatet