Work Instruction

015 PLM

Basics and Methodology CATIA V5 - Drawing Execution

W_015_014

Contents

1 Purpose ... 3
2 Scope ... 3
3 Terminology ... 4
4 Responsibilities ... 4
5 Description ... 5
5.1 Information in the title block in general ... 5
5.1.1 Completing the title block ... 12
5.2 Drawing design in general ... 13
5.2.1 Definition of the main view ... 13
5.2.2 Views arrangement ... 14
5.2.3 Adding isometric views ... 14
5.2.4 Drawing design ... 14
5.2.5 Drawings with colour-neutral construction ... 15
5.3 Lines, line thicknesses and dimension heights ... 16
5.4 Dimensioning in general ... 16
5.5 Labels and drawing information in general ... 17
5.5.1 Font sizes ... 17
5.5.2 Technology blocks ... 17
5.5.3 Inserting tables on drawings ... 18
5.6 Surface treatment ... 18
5.6.1 Overview - surface treatment, e.g. ... 19
5.6.2 Labels ... 19
5.6.3 Specification of surface treatment, e.g. ... 20
5.6.4 Specification of surfaces in offer drawings ... 20
5.7 Revisions in drawings ... 21
5.7.1 Description of revision ... 21
5.7.2 Entry of the index ... 22
5.7.3 Creating drawings with “Replacement for same number” ... 22
5.8 Executing drawings ... 23
5.8.1 Collection drawings with/without weight specification ... 23
5.8.2 Standard parts ... 24
5.8.3 Catalogue parts / purchased parts ... 24
5.8.4 Data sheets for covering material ... 25
6 Applicable documents ... 26
7 Changes ... 26

1 Purpose

The purpose of this work instruction is to support CATIA V5/NX users at GRAMMER AG and to present a standardised procedure and definition for the generation of drawing derivations.

2 Scope

This work instruction shall be binding for GRAMMER AG as well as for external partners that are part of GRAMMER AG's design/development process and create data for GRAMMER AG in this context or provide GRAMMER AG with such data.

This work instruction as well as the methods and procedures described in it shall also apply to customer projects unless replaced completely or in part by separate agreements.

Upon entering into force, this work instruction shall replace all previously valid work instructions that covered this subject for thus CAD systems.

The following applies to the application of the new work instruction and the expiry of the previous work instructions:

- For "ongoing old projects", the rules specifically defined for that project shall apply. If such rules are missing completely or in part, this work instruction shall apply where necessary.
- If there are definition gaps, in case of doubt the rules applicable up to now as well as implemented methods shall apply in these situations.

3 Terminology

CATIA/NX/SmarTeam-specific descriptions of functions are written in italics.

RMB	Abbreviation: **R**ight **M**ouse **B**utton -> to access shortcut menus, for example
SmarTeam	Software for managing CAx data documents from CATIA V5/NX
Mapped	From mapping -> method for structuring information so it is displayed in a purposeful manner

4 Responsibilities

The implementation of and compliance with this work instruction are the responsibility of the vice president R&D.

5 Description

5.1 Information in the title block in general

All the information that can be defined by the user in the profile cards for entry in the title block is discussed briefly below.

Drawing title block for Division Commercial Vehicles / Automotive:

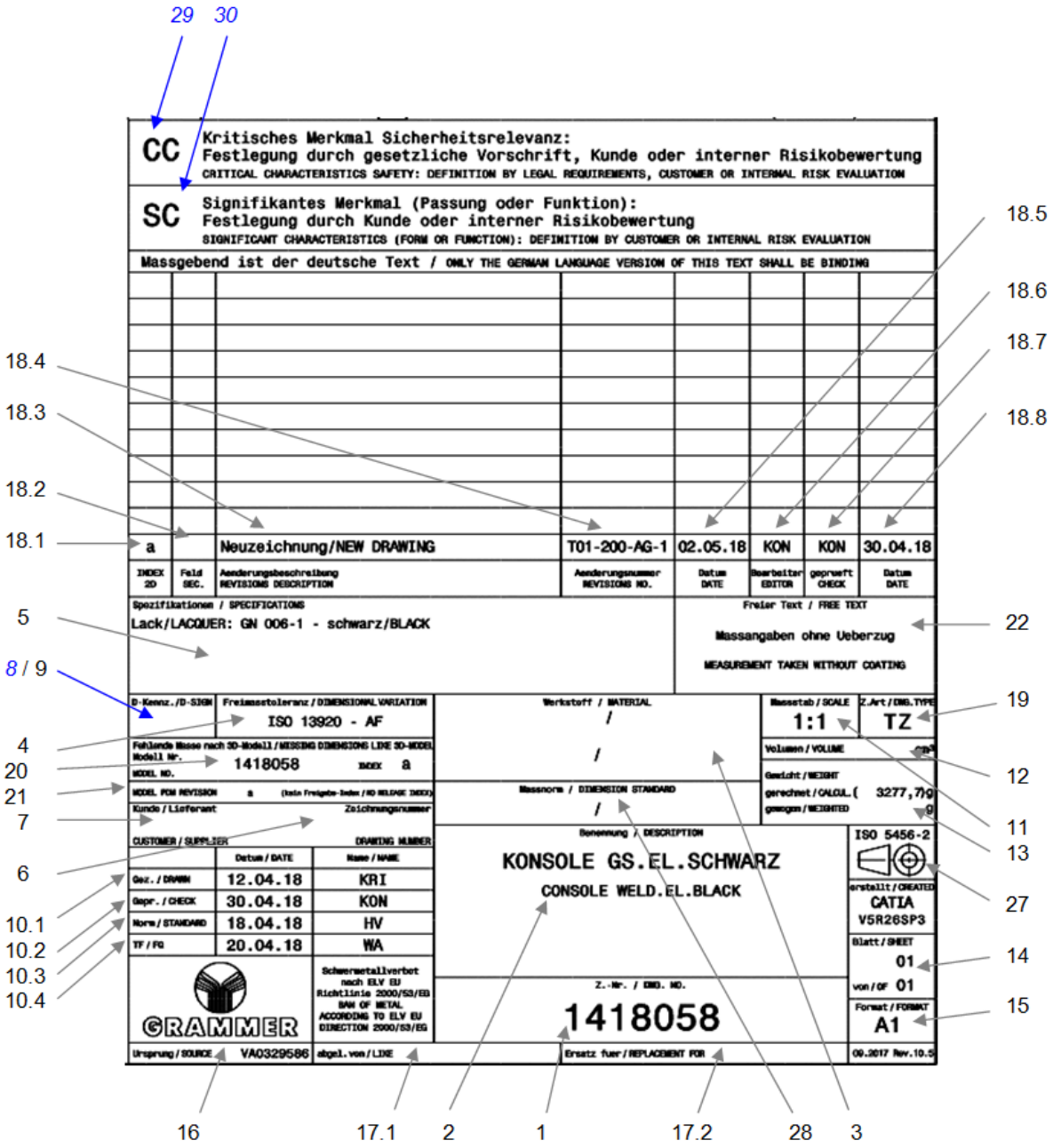

Drawing title block for Railway:

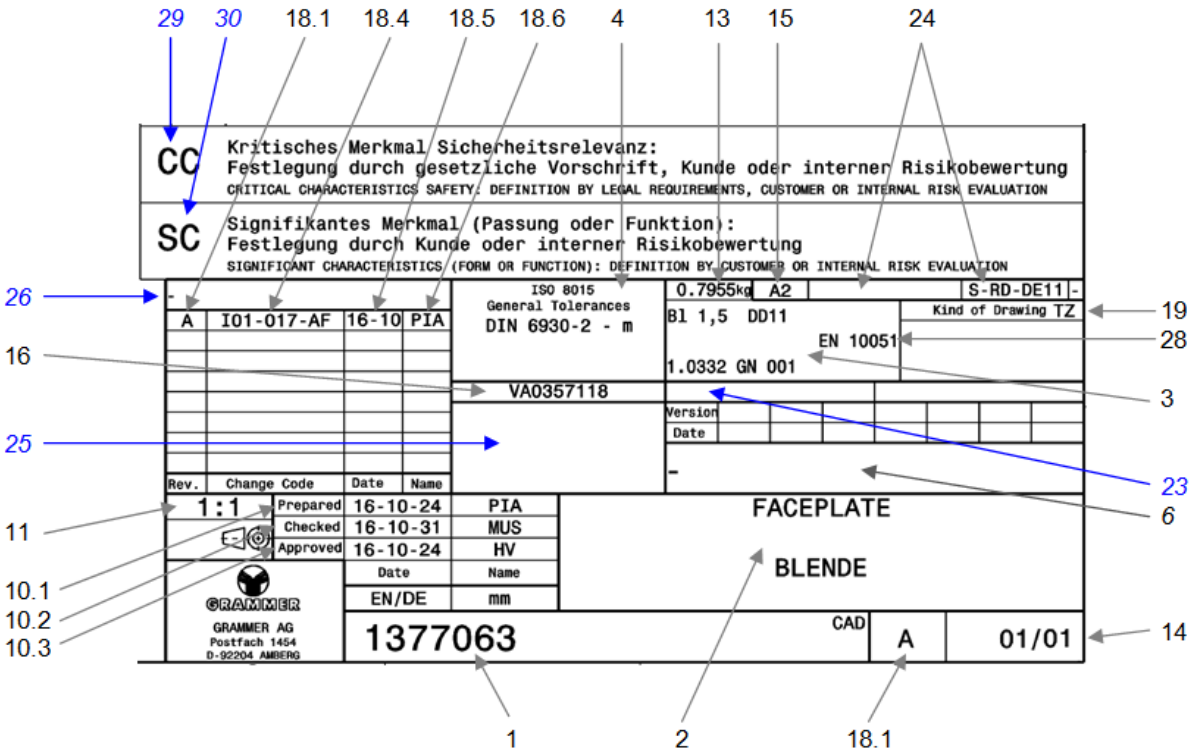

Please note: The title blocks from the passenger seat area of GRAMMER AG are represented by „filters“ according tot he project used.
<u>Therefore, the illustration may differ from this example.</u>

Explanation of information relevant to the title block in the profile cards:

1. Drawing number:

   6- or 7-digit numbers (without any spaces) e.g. 809604 or 1025400 are generated from the SAPIF (SAP-Interface).

   Drawing numbers allocated to part drawings is the part number of the part in its final state (e.g. for parts with lacquer/electroplated coating)!

2. Description:

   Name of the part
   The description should be specified not according to the purpose (e.g. retainer), but according to the nature of the part (e.g. angle) with the help of the database on the Intranet.
   Reason:
   - Other possible uses
   - Consistent description in SAP and design BOM

   Descriptions or the order of any supplementary descriptions can be obtained from the SAP test centre (e.g. “LOWER SUSPENSION PART. WELD.WST…”)
   (Exception for **Railway**: FSF guidelines must be observed here).
   Note: The first word of the designation is always a completely written name, in the first place no abbreviations are allowed.
   (Exception for function assemblies: The abbreviation "FB_" in the first place is followed by a completely written name.)

   Additional description is filled out with the project name at **Automotive**.
   At **Railway** the additional name is entered only in case of old projects (till spring 2018) in the drawing title block (template FSF 23). For new projects, the main designation is entered in capital letters (template FSF 30).

3. Material:

   Specification of the material (imported from Intranet database!)
   - If an alternative material must be specified, this entry is made in the “Specifications” field.
   - Specification of the material for supplier drawings: see under 5.8.3

4. Dimensional variation:

   Permissible deviations for dimensions without tolerance specifications (imported from Intranet database!), e.g.:
   - ISO 2768 = General tolerances
   - DIN 6930 = Punched / bent parts
   - DIN 16742 = Plastic parts
   - DIN 8062-3 = Pressure die castings
   - ISO 13920 = Welded constructions

5. Specifications:

   Additional information and instructions on surface treatment, colour, material, etc.
   - “*Measurement taken without coating!*”, etc., can be entered here (only for lacquered plastic parts, otherwise in the “free text” field).
   - Specification of an alternative material.
   - Colour definitions of the part (automatically mapped from the 3D part).
   - Further information on the subject of surface treatment can be find in the “*Surface treatment*” section.

6. DWG. no. of customer/supplier:	Specification of the drawing number of the customer/supplier Specification of the FwP number (**Railway**)
7. Customer/supplier:	Enter the name of the customer / supplier
8. *D-sign:*	• **In Automotive – old, running projects:** Documentation obligation! If the drawing of the part/product must be documented, “Dx” (e.g. D1, D2) is entered in this field. • **For new projects *and drawing changes* in all areas:** Use only the special characteristics “CC” and “SC” → for more information see W_015_026.
9. R & L sign:	Recycling and legal indication: This information is replaced from the D-sign. • **R** = The recycling category to which this part belongs • **L** = All part numbers and their features that have a direct reference to statutory provisions are recorded. Derived features are not identified.
10. Creator and reviewer:	The date as well as the initials of the corresponding people (depending on the progress of the process), are entered by the system. • Every drawing is reviewed and released by the designer responsible for the product as part of the workflow. • **Division Commercial Vehicles / Railway:** Welded part drawings (“**WELD.**” in the description) are also released in the workflow by the welding engineer. Glued part drawings (“**.GL**” in the description) are also released in the workflow by the adhesive specialist. <u>Note:</u> For welded parts the point have to be set after "**WELD.**", for glued parts the point have to be set before "**.GL**" • **Automotive:** Welded part drawings and are released by the product developer.
10.1 Drawn: (Railway: Created)	Creator of the drawing Initials according to the database (Intranet)
10.2 Check: (Railway: Check)	Name of the reviewer who checks the drawing for execution appropriate to the function (responsible product developer). Initials according to the database (Intranet)
10.3 Standard: (Railway: Released)	Name of the reviewer who checks the drawing for execution in compliance with standards. Initials according to the database (Intranet)
10.4 TF/FQ:	Name of the reviewer who checks the drawing for ability to manufacture the part (only for manufacturing drawings). Initials according to the database (Intranet)

11. Scale:	Scale information relating to the generated views Approved scales for views in drawings are: • 1:1 • 1:2 • 1:3 (for spare part and assembly drawings only) • 1:4 (for spare part and assembly drawings only) • 1:5 • 2:1 • 5:1 • 10:1
12. Volume:	**Division Commercial Vehicles / Automotive:** The volume is transferred to the title block. **Railway:** The volume is not transferred to the title block.
13. Weight:	**Division Commercial Vehicles / Automotive:** Weight information: • As calculated weight in brackets • As weighted weight **Railway:** only one weight information. The weighted weight is displayed. The calculated weight is only displayed, if the field weighted weight is empty. In all areas, no weight is given in order drawings and DMU models.
14. Sheet:	Sheet number and total number of sheets in this drawing document (mapped automatically from system)
15. Format:	Format of the drawing (mapped automatically from system)
16. Source:	Number of an existing part similar to this part.
17.1 Like:	Number of an existing part from which the current part has been derived.
17.2 Replacement for:	Number of the replaced drawing, e.g. the number of the last valid development drawing.
18. Revisions field:	All the information on the respective revisions of the drawing is entered here (revision index, revision no., revision date, name of person making revision, name of person checking revision). The revisions description must be entered in German/ENGLISH each time.
18.1 Index:	Revision status of the drawing. • **Division Commercial Vehicles / Automotive:** lower-case letters • **Railway:** upper-case letters

18.2 Sec:	Enter the grid square in which the revision was made, e.g. “C12”. No obligatory field - for unclear, difficult to find indices/changes.
18.3 Revision description:	Enter text of the revison.
18.4 Revision number:	Enter the number of the revision according to the GRAMMER standard.
18.5 Date:	Date on which the revision was incorporated.
18.6 Editor:	Name oft he editor who incorporated the revision.
18.7 Check:	Name oft he reviewer who checkst he revision for correct execution (responsible product develeoper).
18.8 Datum:	Date oft he drawing check.
19. Drawing type:	Select drawing types from the list in the profile card, e.g. • TZ = part drawing (lubrication plans) • SZ = collection drawing • AZ = offer drawing • SP = circuit drawing (SAP material type „ZCHN“, always without 3D objects) • MZ = mountin drawing (drawing type always „MZ“. Exception: The drawing type „SZ“ is used for collections of function modules („FA_“).)
20. Missing dimensions:	Missing dimensions according to data record.
21. Model name:	Model name and revision status of the 3D model, if available.
22. Free text:	Free text entry, e.g. „Measurement taken without coating“
23. Issue / Date: (nur Railway)	*Issue / Date*
24. Internal department name:	GRAMMER internal department name of the creator department.
25. Customer logo:	The customer´s logo *or the customer disignation in text form* can be entered here.
26. Usable for (Railway only):	*Details of the customer projects in which the object (shown on the drawing) is used.*

27. Projection method :	The symbol for projection method 1 is displayed. The symbol for projection method 3 (for English-speaking countries) is present in the NoShow and can be displayed as required. In the railway area is not possible to do this.
28. Dimension standard:	Dimension standard is automatically filled with the material.
29. CC	*Information for CC Designation*
30. SC	*Information for SC Designation*

5.1.1 Completing the title block

For the information that is entered in the title block attention must be paid to the following points in particular:

a) Complete all the mandatory fields in the tab of the 3D data record. The Intranet lists should be used for this purpose (if available).

b) Generate a new drawing derivation in a CATDrawing file (Catia V5) / .PRT file (NX) after specifying or opening an existing drawing derivation in write access (→ ”Check out” for Catia V5 / “NX Copy” for NX).

c) Update the title block:
   - Catia V5: run the function “Script01”
   - NX: run the function “Map Titleblock”

d) The data from the tab is transferred and mapped into the fields of the drawing derivation.

If individual fields are not completed adequately by following the steps described above, the data record of the drawing derivation should be saved and checked into SmarTeam. The document is then checked out again and steps a) - d) are repeated.

If information are missing (because it was not stored in the profile card of the 3D data record, for example) these can be entered (afterwards) in the profile card of the drawing document. Via the RMB shortcut menu, the document can be placed in edit mode using the Update function in the document view of the SmarTeam editor in order to store the additional information.

- Enter any surface treatment (in the Specifications field) - see item 5.6
  - Enter “Measurement taken with/without coating!” etc.
  - For plastic parts or pressure die castings: “Measurement taken for finished end product (without shrinkage)”

- Enter “customer/supplier” and “DWG. no. of customer/supplier”, if relevant – see item 5.8.3

- Insert any further details in available empty fields of the profile card.

5.2 Drawing design in general

5.2.1 Definition of the main view

Main view = front view

In CATIA V5/NX, the front view is synonymous with the main view. Given that this view plays such a central role in the definition of the drawing, the front view should be the most informative view.

In a new drawing derivation, the front view is the first view that is generated; other projection/section/auxiliary views are then produced from this view.

Orientation of the front view in the “production position”!
e.g. turning parts horizontal, largest diameter to the left

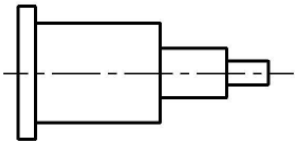

Orientation of the front view in the “position of use / installation position”!
(Simplification with elevations, assembly drawings, etc.) e.g. top view (= main view) of seat plate, upper suspension part, etc. in the driving direction from right to left

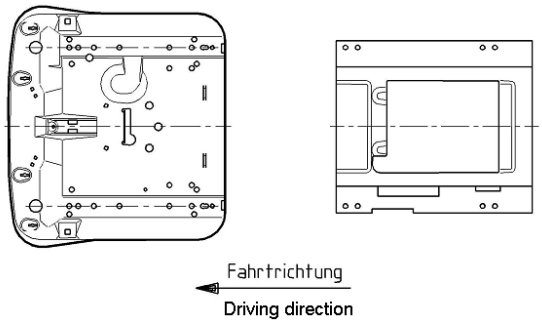

5.2.2 Views arrangement

- Old: View method E-ISO R 128
- New: Projection method 1 according to ISO 5456-2

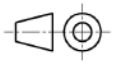

Note: Always arrange additional views (e.g. view “X”) in a projection-suitable manner in the direction of the arrow!

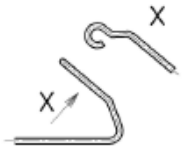

5.2.3 Adding isometric views

For a better definition/explanation (in the case of intricate parts, for example), an isometric view (“axono” view) can be added to the drawing.

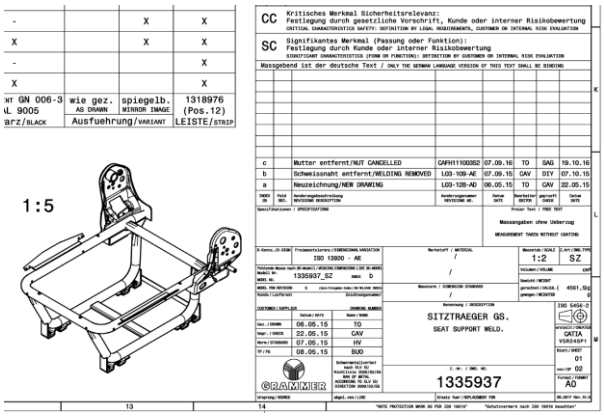

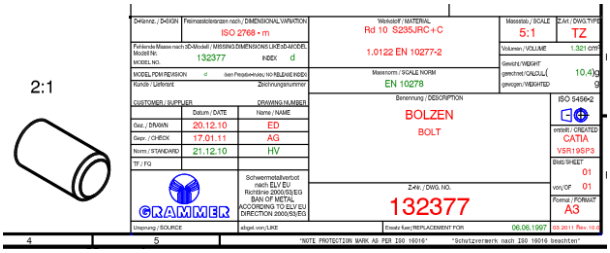

5.2.4 Drawing design

- MZ (assembly drawing): see *”assembly drawings”* (Intranet)
- AZ (offer drawing): see *”offer drawings”* (Intranet)
- EZ (spare part drawing): see *”spare part drawings”* (Intranet)

5.2.5 Drawings with colour-neutral construction

All parts which are visible on the end product are visible parts. For the colour-neutral construction, the following applies:

- A drawing of a **part** that has different colours has the document type **SZ with weight specification** and the SAP material type **ZCHN**. Part and drawing have the same part number.
- In the case of drawings of **parts** in which the structure has only been **mirrored** (left and right) variant and also different colour, the drawing is created by the **left colour neutral part** and also receives the number of the left part. The right part is linked to the drawing. The drawing has the document type **SZ with weight specification** and the SAP material type **ZCHN**.
- If several **different parts** (for example high, low, luxury variant) are indicated with different colours on a drawing, the drawing is given an **extra SZ number**. If necessary, a SZ part (with part number _SZ) is created for display on the drawing. All required parts are added to the drawing. No weight is indicated in the drawing. It has the document type **SZ** and the SAP material type **ZCHN.**
- **End products** can have the document type **SZ, AZ or ZB (Automotive only)** and SAP Material Type **ZCHN**.
- The **correct material** is assigned to the **3D data** of the colour-neutral designed part.

Overview:

Drawing	**Drawing number**	**Document type in SmarTeam**	**SAP Material Type**
Part drawings	Same number as part	SZ with weight specification	ZCHN
Part drawings with mirrored variants (left and right parts)	number of the left part	SZ with weight specification	ZCHN
Part drawings with different variants	extra SZ number	SZ (without weight specification)	ZCHN
with only one end product	same number as the product	ZB (only Automotive) / SZ / AZ	ZCHN
with several end products	extra SZ-Sachnummer	ZB (only Automotive) / SZ / AZ	ZCHN

<u>In case of changes of colour-neutral data, the following applies:</u>
If an additional variant (for example high, low, luxury) is added while a modification process of a colour-neutral component (drawing number = number of the colour-neutral component) is changed, a neutral SZ drawing number should be created. In individual cases the drawing number can remain the same, it does not necessarily have to be changed to a neutral SZ drawing number.

5.3 Lines, line thicknesses and dimension heights

For drawings, follow “W_015_007 Unification of CAD Standards”.

5.4 Dimensioning in general

If dimensions are generated on a drawing, the following points must be taken into account:

- Observe the rules for dimension entries (see DIN 406).
- Pay attention to “functional” dimensioning.
- Enter any theoretically exact dimensions → $\boxed{}$
  (see “M_015_005 Manual Reference-Point-System GRAMMER (RPS)”)
- Use special characteristics “CC” and “SC” (see “W_015_026 Specification and Identification of Special Characteristics”).
- Always enter dimensions with the maximum possible tolerance or select suitably “*rough*” general tolerances.
  - “undimensioned fillets R3 ± 1”
  - “undimensioned chamfers 5 x 45°”
  - “undimensioned wall thicknesses 2 ± 0.2 mm”

  } possibly enter

5.5 Labels and drawing information in general

If additional explanations are inserted on a drawing, every sheet must contain a view with the name "*2D annotations*". Any additional information that cannot be stored in the drawing title block must be assigned to this view.

For labels (text, text with reference line, etc.) use the standard font *MONOSPAC 821 BT*.

Do not use umlauts (ä, ö, ü) and "ß" -> instead "ae, oe, ue" and "ss".

Additional information on drawings should (if possible) be taken from catalogues.

Always write part or item numbers without spaces, e.g. 127765; depict the end of the reference line without an arrow or point.

The additional explanatory information on drawings depends partly on the type of drawing concerned. <u>Generally speaking, this information gives some indication of</u>

- The manufacturing process
- The desired precision
- (Surface) treatment
- Or even translations into other languages (see "W_015_007 Unification of CAD Standards")
- "Workpiece edges ISO 13715", e.g. ->

(contained in the technology block)
- Surface data (contained in the technology block):
  - Use roughness average Ra according to ISO 1302
  - According to VDI 3400 (eroded structure, grain structure e.g. VDI 3400 ref. level: 27)
- Welding data
- Surface data: (electroplated coating, lacquer, coating) - see item 5.6

5.5.1 Font sizes

→ See "W_015_007 Unification of CAD Standards" or on the Intranet under:

- MZ (assembly drawing) see section on assembly drawings (Intranet)
- AZ (offer drawing) see section on DMU´s – AZ´s (Intranet)
- EZ (spare part drawing) see section on spare part drawings (Intranet)

5.5.2 Technology blocks

The required technology blocks are inserted from the catalogue into the "2D annotations" view.

5.5.3 Inserting tables on drawings

Explanations or variants sometimes call for tables on drawings. Tables can be added to the corresponding drawing sheet by inserting them into the additional view with the name “*2D annotations*”.

5.6 Surface treatment

The surface treatment information is defined differently depending on the business segment. This is mostly the result of different customer requirements.

Title block for Division Commercial Vehicles / Automotive:
Here, the surface information is mapped into the Specifications from the 3D part.

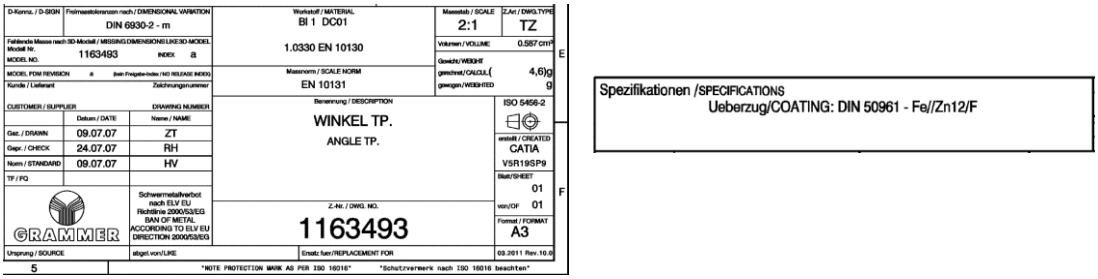

Title block for Railway:
The surface specifications are specified in the parts list (table on the drawing).

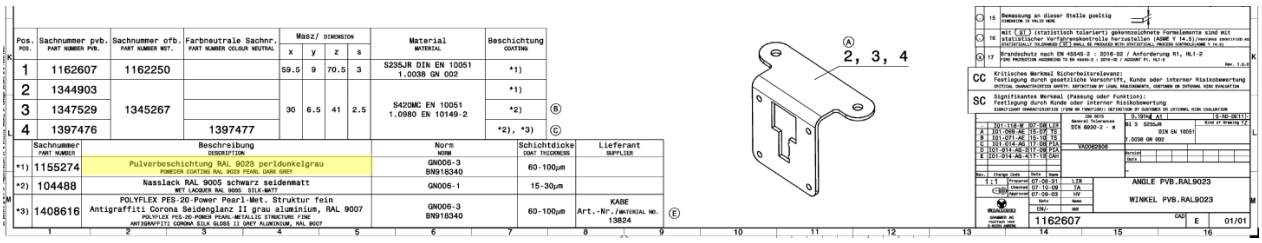

5.6.1 Overview - surface treatment, e.g.

- ISO 4042 = Electroplated coating for mechanical fasteners (screws, nuts, etc.)
- DIN 50 961 = Electroplated coating for other parts
- GN 006-.. = Lacquer/coating

5.6.2 Labels

- Drawing no.: Part number of the part in its **final state**
  (Enter the part number of the WST part in the technology block!)
- Description: With surface-treated parts in **Division Commercial Vehicles / Automotive**, information such as “TP (clear passivate), SP (black passivate), PVB.” is automatically mapped from the 3D part!
  (e.g. “LOWER SUSPENSION PART. WELD. CLEAR PASSIVATE.”)
- Surface treatment: The surface treatment is indicated in “Specifications” (mapped from 3D part)!
- All the dimensions in part drawings refer to the state of the part without surface treatment!
  - Enter “Measurement taken without coating!” in the title block!
  - In the case of exceptions: “Measurement taken including coating”

<u>Example:</u>

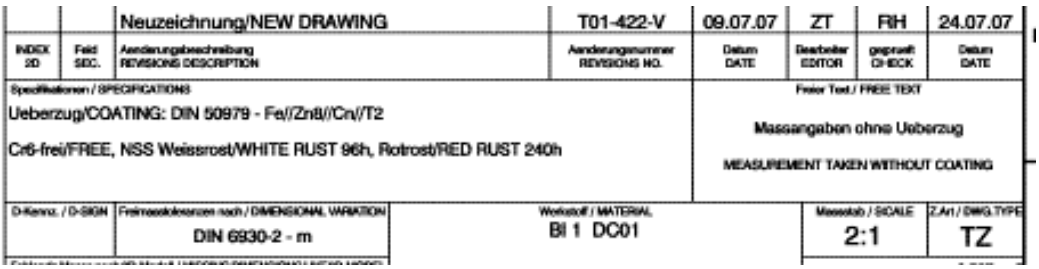

5.6.3 Specification of surface treatment, e.g.

- For DIN EN ISO 4042 - ELECTROPLATED COATING FOR MECHANICAL FASTENERS:
  - Überzug/COATING: ISO 4042–A3T,T2 (= black passivate = SP.)
  - Überzug/COATING: ISO 4042–A3K,T2 (= clear passivate = TP.)

- For DIN 50962 - ELECTROPLATED COATING FOR OTHER PARTS:
  - DIN 50961 – Fe//Zn12/F (= black passivate = SP.)
  - ISO 19598 – Fe//Zn8//Cn//T2 (= clear passivate = TP.)
  - ISO 1456 – Fe//Ni15bCrmc (= chrome-plated = VCR.)

- For DIN EN ISO 9717 - PHOSPHATING:
  - ISO 9717 – Fe//Znph/r/45/f (= phosphated = PHR.)

- For GN 006-… - LACQUERING/COATING:
  - ONE-COAT FINISH: e.g. “Lack/LACQUER: GN 006-1”
  - TOPCOAT FINSH: e.g. “Lack/LACQUER: GN 006-2, RAL 5015, blau/BLUE”
  - POWDER COATING: e.g. “Pulver/POWDER: GN 006-3, RAL 7036 grau/GREY”

5.6.4 Specification of surfaces in offer drawings

see Intranet “DMU´s – AZ´s“

5.7 Revisions in drawings

Attention must be paid to all drawings and other documents relating to the revision!
Consistency from the bottom up is left to the respective designer!

When any revision is made, it is essential to check which documents are involved. These are, for example, the following documents:

- AZ Offer drawing
- EZ Spare part drawing
- MZ Mounting drawing
- HOM Homologation drawing
- ZB Assembly drawing (only Automotive)
- General part drawing
- Part and product drawing with any spare part assembly drawing
- Operating instructions
- Assembly instructions for spare parts
- Installation notes
- Repair Manuals

If revisions are made to drawings, it is vital to try to ensure that the revisions introduced are understandable. This applies to the description of the revision just as it does to the “marking” of areas on the drawing using the so-called index entry in the image section. Every revision must be released after it has been completed.

5.7.1 Description of revision

If revisions are only made within a specific grid square (in this case B 2) in drawings (from DIN A1 format) with a revision (e.g. revision index “e”), this should be noted in the drawing title block in “*Sec.*” (in profile card “Section”)!
Indices “i” and “o” are not used.

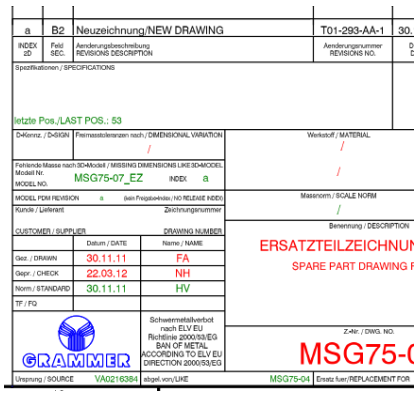

5.7.2 Entry of the index

- Placing a revision index by revised dimensions, texts, part numbers, etc.!
  Beachte: Do not overfill the image section with revision indices!
  - Mark several dimensions, where applicable, with just one index.
  - Place revision index “centrally”, where applicable.
  - Only enter revision indices in the “main reading direction”.

- In the case of spare part drawings (only at complete seat), assembly instructions, operating instructions, repair manuals, supplier and customer drawings (with attached GRAMMER drawing head) etc. no revision indices are entered in the image section. Enter the revision description text in the title block in German/ENGLISH.

5.7.3 Creating drawings with “Replacement for same number”

- Remove old revision numbers that are no longer contained in the title block from the image section of the drawing as indices.

- Enter the revision with which the new drawing is created in the title block.
  - The new drawing must start with the sequential index!
    - e.g. last index in the “old” drawing: “ac”
    - first index in the “new” drawing: “ad”
  - Modification text while acquisition always “Uebernahme/*TAKEOVER*“

5.8 Executing drawings

5.8.1 Collection drawings with/without weight specification

The collection drawing is basically a part drawing and therefore contains all the necessary details of a part drawing, such as: dimensions, tolerances, surface treatment, etc.

Given that the collection drawing number is not a “real” part number, “SZ” (collection drawing) is entered for the drawing type in the title block. Usually, a 3D object (SZ object) is generated.

Note:

- Whenever the drawing is revised, all the linked 3D objects must also be taken into account!
- The drawing number is not a “real” part number.

A collection drawing is created in the case of:

- Several similar parts: e.g. pins, bushings, upholstery drawings, ...
- Several similar-to-standard parts
- colour-neutral construction

Exception:
A collection drawing (SZ) is not created in the case of offer drawings (AZ) -> even though several similar seats with different features may have been drawn on one drawing

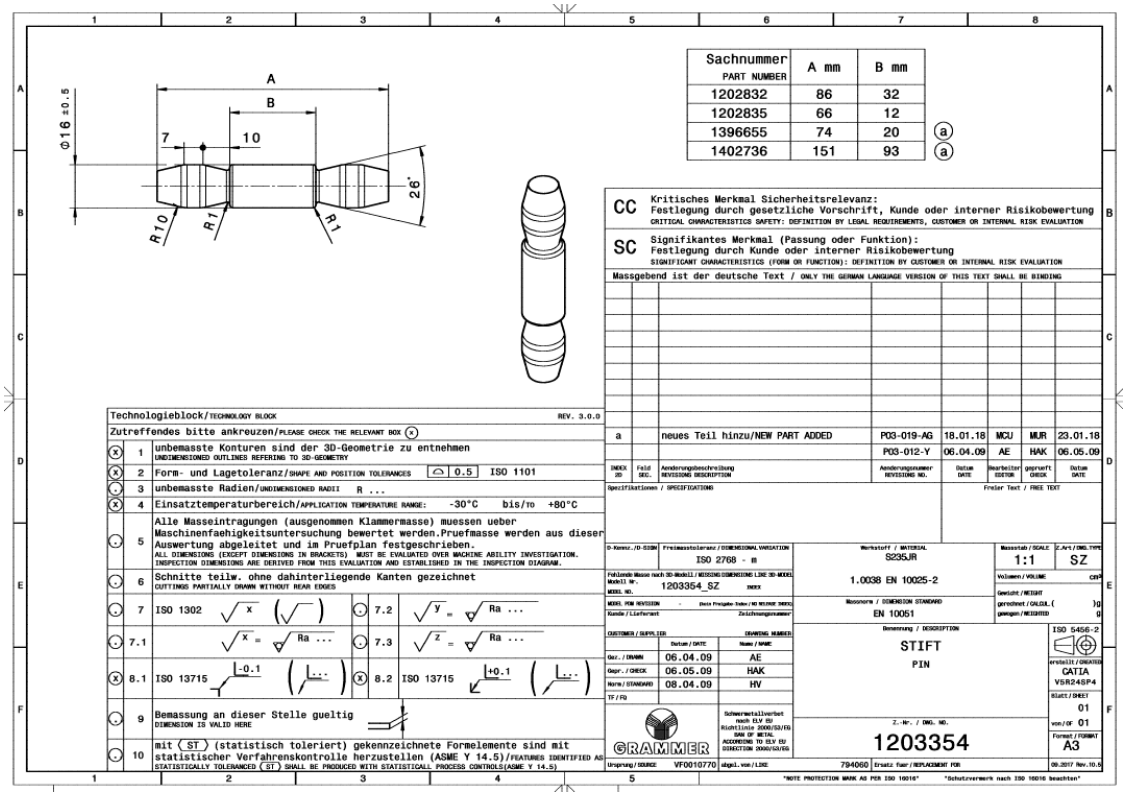

5.8.2 Standard parts

- Standard parts are **not** drawn!
- Dimensions, tolerances, material, etc. can be found in the relevant standard!
- If necessary, a 3D CAD object must be created!
  Note: If the standard is revised, pay attention to the 3D object!

5.8.3 Catalogue parts / purchased parts

- With catalogue and purchased parts, **always** request the supplier data (3D and 2D)!
  EXCEPTION: Supplier manufactures based on the GRAMMER drawing.

- Copy the supplier drawing onto a suitably larger GRAMMER drawing format; complete the title block in the usual manner. Enter the name and order number of the supplier!

- Specification of the material for supplier drawings:
  - For part drawings from the supplier, the material must be created in the database and assigned in the drawing in the title block.
  - For assemblies from the supplier, for which the materials of the parts are described on the drawing, no material has to be created in the database and assigned in the title block. Measured weight of the assembly must be entered.

- A 3D CAD object must always be available! If revisions are made, pay attention to the 3D object!

- If no supplier drawings are available, a “text drawing” including 3D object must be created!
  IMPORTANT INFORMATION:
  - Supplier address
  - Description of the part
  - Order number of the part
  - Any specifications for the part

- In principle, **nothing** should be revised in supplier drawings and no GRAMMER indices should be entered within the drawing! GRAMMER indices are only placed at the side of the supplier drawing.

- In the event of a revision, a new (revised) supplier drawing must be requested to replace the old one in the existing GRAMMER drawing! The 3D model has also to be adapted to the change.

5.8.4 Data sheets for covering material

When creating data sheets for covering materials, the following points must be observed:

- *The drawing requires a separate drawing number.*
- *For the designation of the drawings of the covering material data sheets, only "FABRIC", "LEATHER", "SYNTHETIC LEATHER", or similar to get voted.*
- *The number of the covering material (raw material) is described in a table on the drawing.*
- *No 3D model is created.*
- *Doc. Type: SZ*
- *SAP Material Type: ZCHN*

The link between raw material and data sheet drawing is carried out on the part of SAP master data maintenance.

6 Applicable documents

SmarTeam SAP Connection	M_015_004
Reference-Point-System GRAMMER (RPS)	M_015_005
SAP Basic Data Standard Automotive	W_012_002
Unification of CAD Standards	W_015_007
Repair Manuals	W_015_019
Assembly Instructions	*W_015_023*
Operating Instructions	W_015_024
Specification and Identification of special Characteristics	W_015_026
Preparation of Offer Drawings	Intranet
Preparation of Spare Part Drawings	Intranet
Preparation of Assembly Drawings	Intranet

7 Changes

05/2013
Point 5.1, 11. Scale
Point 5.4
Point 5.8.2
Point 5.8.9
Point 6

12/2014
Point 5.1
Point 5.1.1
Point 5.2.3
Point 5.4
Point 5.5
Point 5.5.1
Point 5.6
Point 5.6.2
Point 5.7
Point 5.7.2
Point 5.8.2
Point 5.8.3
Point 5.8.5
Point 5.8.8
Point 5.8.9

03/2017
Revised, update standards
Applicable documents entered
Point 5.2.5
Point 5.6.3
Point 5.8.4

05/2018
Point 6 Elimination of A_015_012
Point 5.1
Point 5.7.3 Reference „Euclid“ omitted
Point 5.7.3 Reference „Euclid“ omitted