# Training document

**015 PLM**

**Creating DMU models and offer drawings**

**T_015_009**

# Training document

## DMU-AZ-Guideline

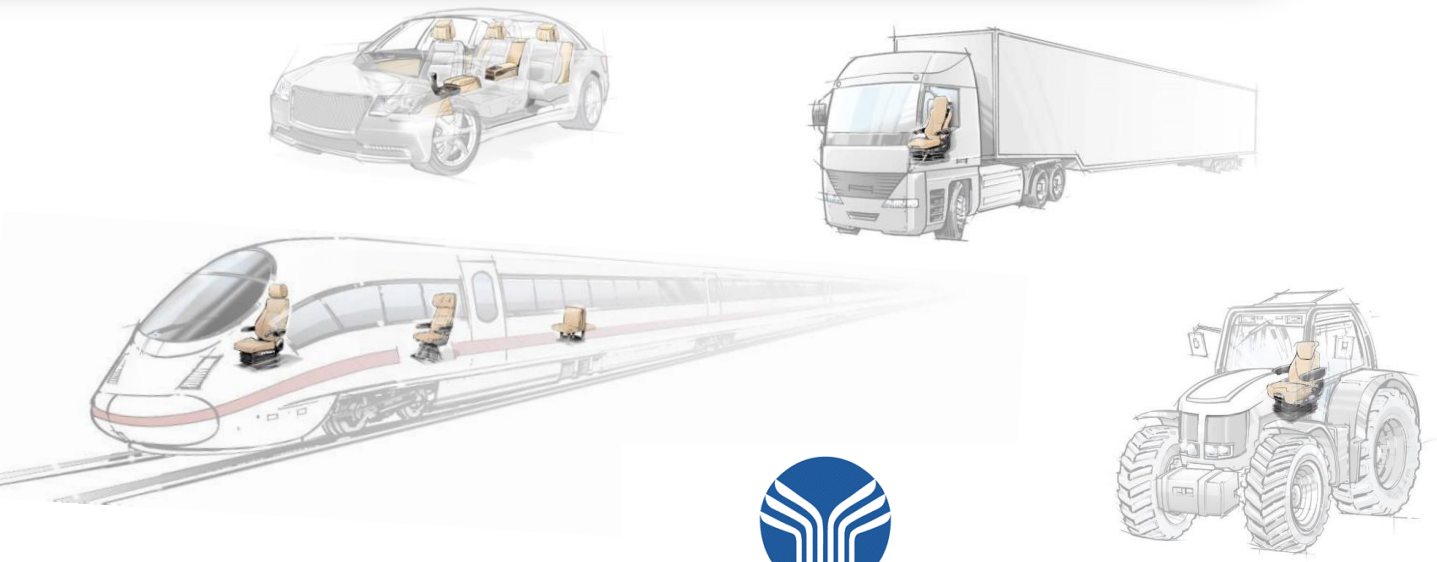

GRAMMER

## Inhalt


1 Specifications and definitions ..... 4
2 Legal notices ..... 4
3 Links to Project and Folder of DMU models in SmarTeam ..... 5
4 Description of DMU model ..... 6
5 Creating a DMU model ..... 7
5.1 Structure-tree ..... 7
5.2 Seat cushion ..... 8
5.3 Konventionell bezogenes Sitzpolster ..... 9
5.4 Speciality: Aft adjustment ..... 11
5.5 Basic models for DMU-creating ..... 12
5.6 Speciality: Cable representation ..... 13
5.7 Conditions ..... 14
6 Hinweise zu den SIP- und Aug-Punkten ..... 15
7 Darstellung von H-Punkt, SIP, SRP und Gurtanlenkpunkt ..... 15
8 Selection SIP – S700 / S500 / conventionally cushions and special cushions ..... 16
9 Indications for suspension heights ..... 20
9.1 Indication for suspension height MSG 97 ..... 20
9.2 Indication for suspension height MSG 95 ..... 20
9.3 Indication for suspension height MSG 93 ..... 21
9.4 Indication for suspension height MSG 85 „H“ ..... 21
9.5 Indication for suspension height MSG 85 „H1“ ..... 22
9.6 Indication for suspension height MSG 83 ..... 22
9.7 Indication for suspension height MSG 75 ..... 23
9.8 Indication for suspension height MSG 65 ..... 23
10 Positioning suspension lower part MSG 65 / 75 ..... 25
11 Creating an AZ ..... 26
12 Creating an AZ for CNH ..... 28
13 Creating an AZ: SmarTeam ..... 29
14 Ansichtserstellung: Lochbild ..... 30
15 Creating the view: Cabel ..... 31
16 Checklist for DMU models ..... 32
17 Applicable documents ..... 33
18 Changes ..... 33

# 1 Specifications and definitions

Aims: Definition of an uniform creation for the preparation of DMU modules in accordance with the following aspects:

- Creating/defining of DMU moduls which could be used for the derivation of AZ drawings
- Managing the DMU moduls in SmarTeam
- Short explanation of ‚to-use‘ functionality
- Reduce variety and the amount of data in SmarTeam
- By using approved parts, ensure the current states of models

Definitions: DMU = Digital mock up respectively digital test model

Important functions: Design Copy (SmarTeam)

# 2 Legal notices

Copyright © GRAMMER AG

GRAMMER AG
P.O. Box 1454
D-92204 Amberg, Germany

Re-printing, reproduction and translation of this document, in full or in part, is not permitted without the written permission of GRAMMER AG.

Amberg, August 2019

# 3 Links to Project and Folder of DMU models in SmarTeam

The DMU models have to be linked to the **project DMU** and the correct **folder**.

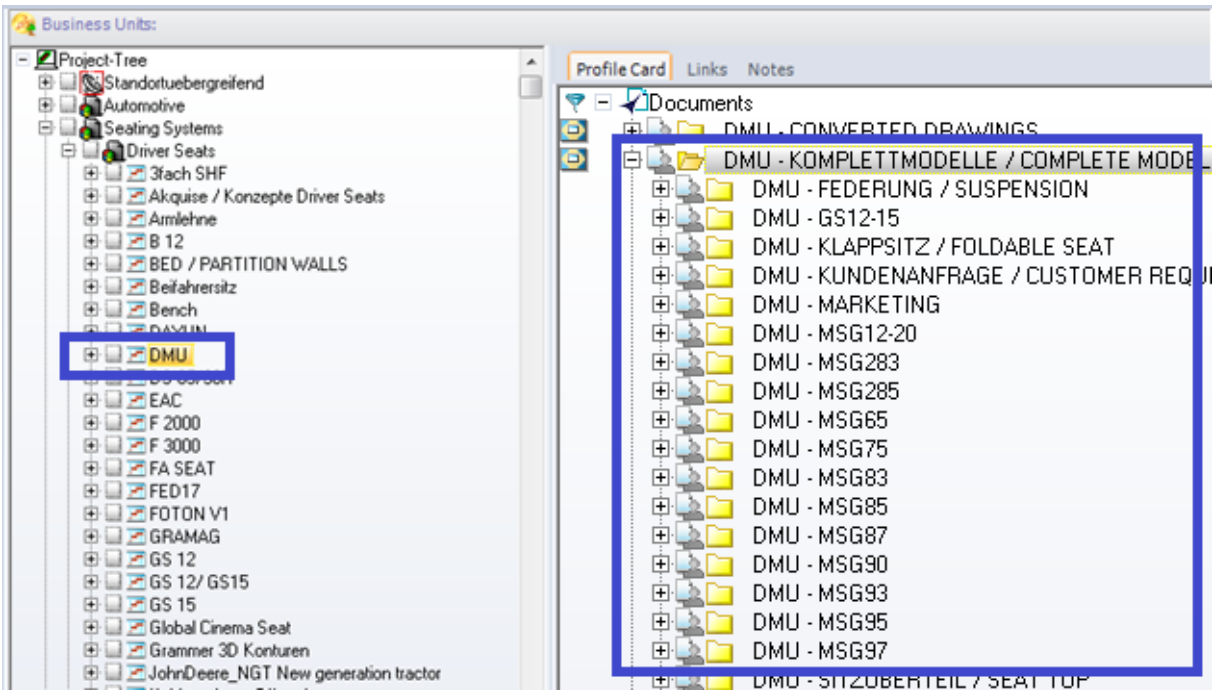

# 4 Description of DMU model

- The model has to be saved with the part number of the AZ and the addition of "_DMU".
  **Do not use the seat number!**

- First of all, store the drawing with the AZ-number, then create a link to the DMU model!

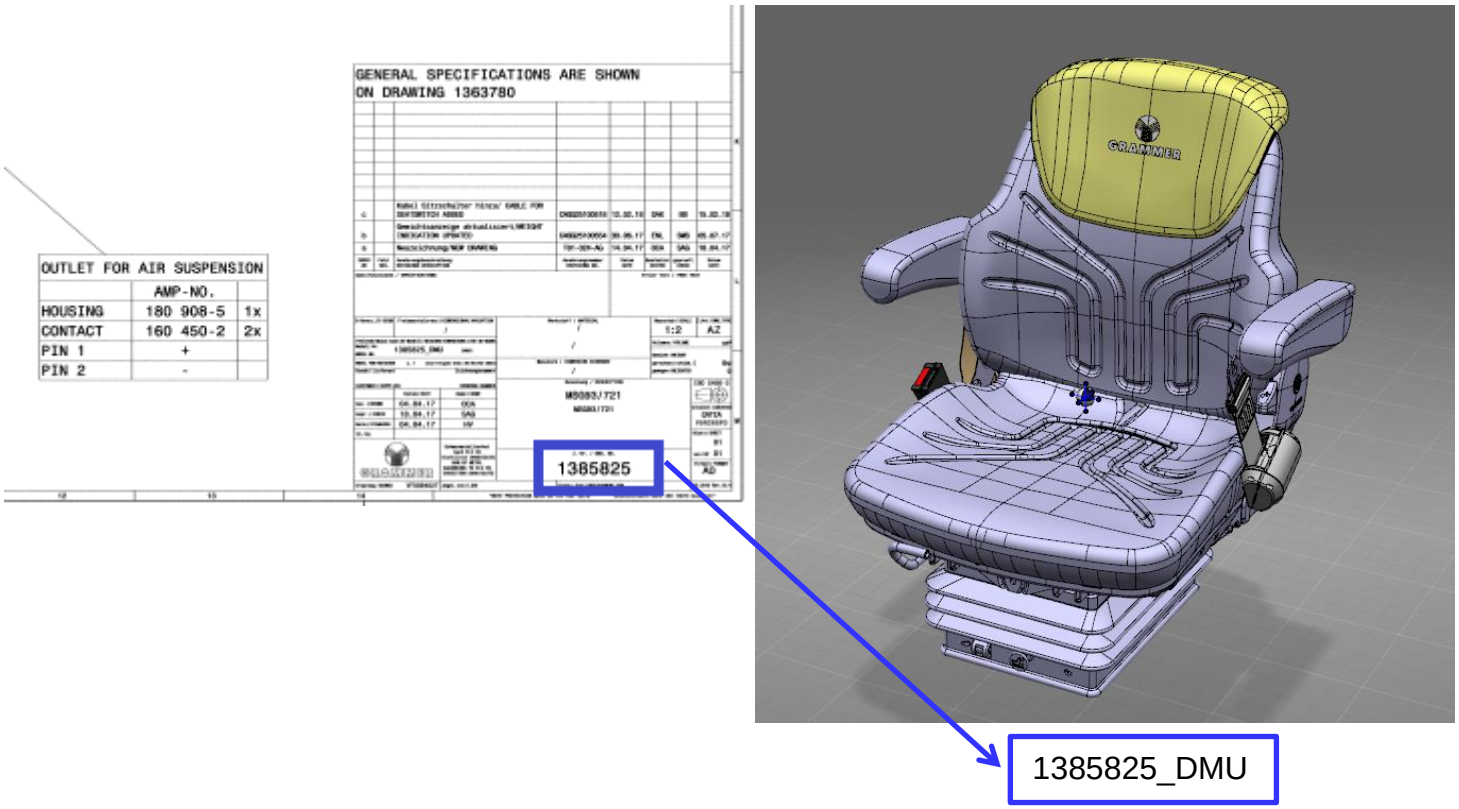

# 5 Creating a DMU model

## 5.1 Structure-tree

- For the creation of a DMU model use a CATIA Product with template "GAG Driver Seats DMU STANDARD Product".

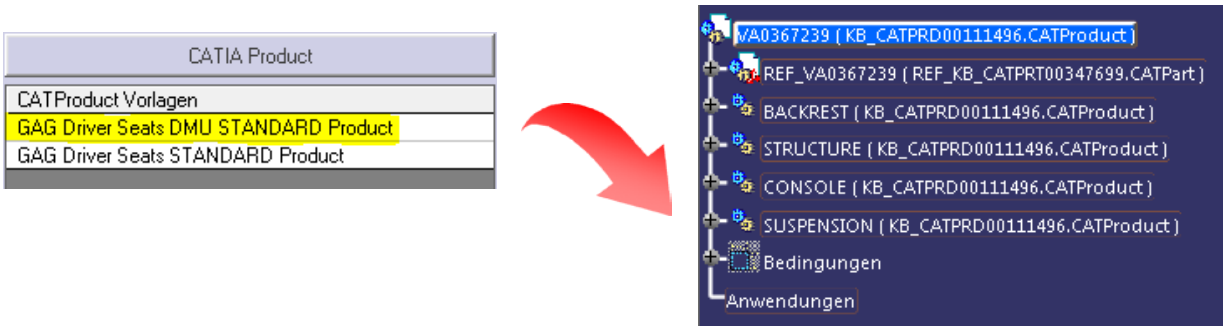


- For better clarity, other components can be inserted into the four main components. (For example: SWIVEL-RAILS)

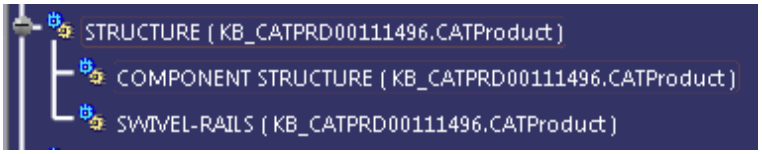


- Delete useless elements.

<u>Tips and Tricks:</u>
To create a new DMU model, **Design Copy** a similar, existing and released DMU model. Then make the necessary adjustments.

## 5.2 Seat cushion

- Insert the seat cushion in the component **Structure** and fix it.

Examples:

| Selection of seat cushions | Seat cushions NEW |
|---|---|
| SP for 72. without SDA./SAA | S.POL.59_S |
| SP for 72. with SDA./ SAA. SP for 73. with | S.POL.60_S |
| SP for 73. without SDA./SAA | S.POL.61_S |
| SP for 74. without SDA./SAA | S.POL.62_S |
| SP for 74. with SDA./SAA. | S.POL.63_S |

- The different seat cushions can be found under the following path:

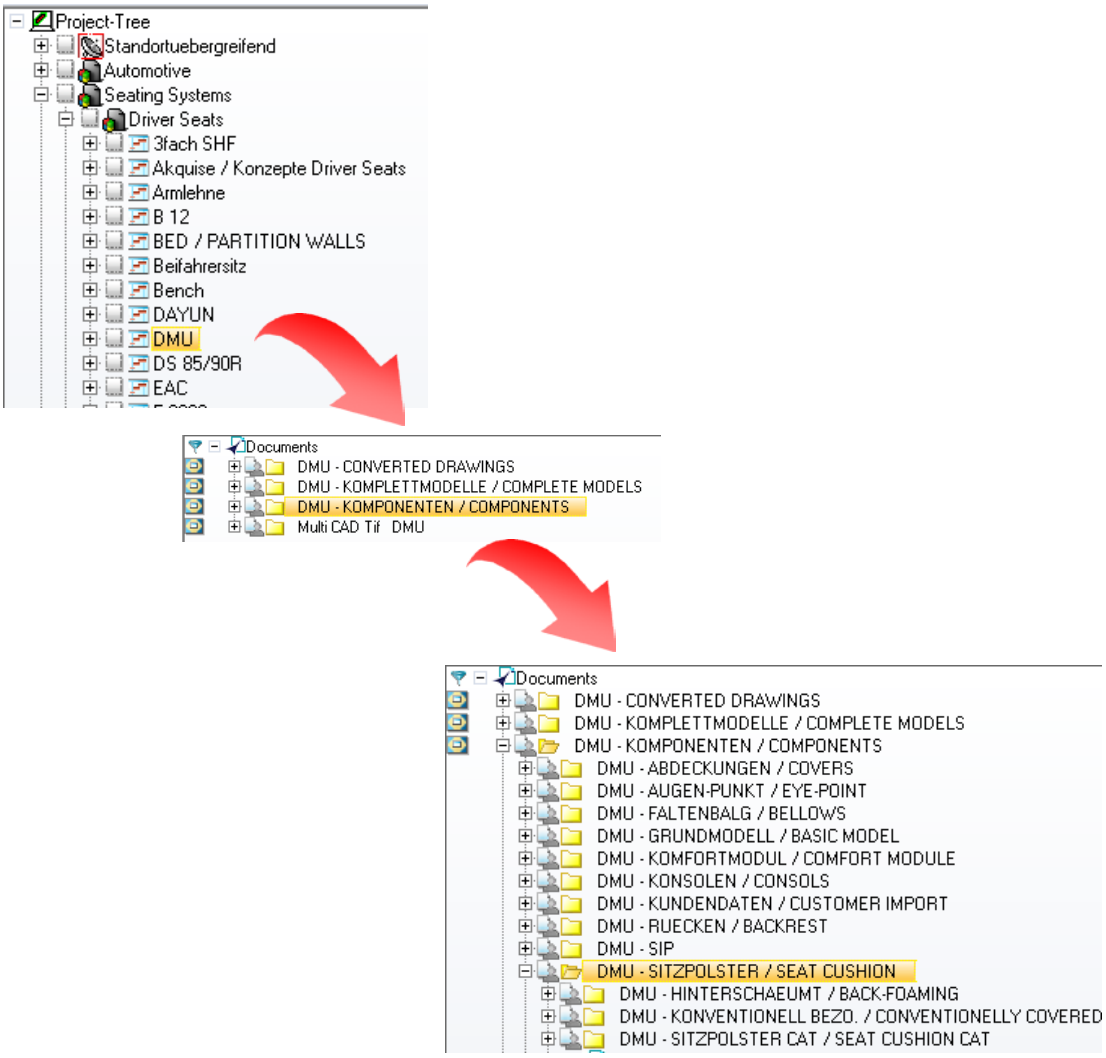

## 5.3 Konventionell bezogenes Sitzpolster

For conventionally related seat cushions with a logo, the original seat covers can be inserted in 3D or the corresponding 2D element (logo) can be inserted in the views of the drawing.

<u>Drawing without inserted logo on backrest extension:</u>

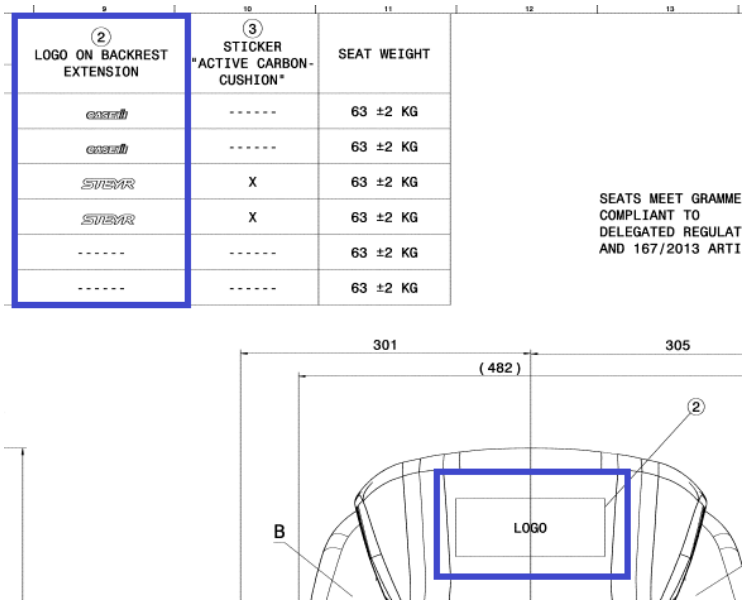

| ② LOGO ON BACKREST EXTENSION | ③ STICKER "ACTIVE CARBON-CUSHION" | SEAT WEIGHT |
|---|---|---|
| CASE IH | ------ | 63 ±2 KG |
| CASE IH | ------ | 63 ±2 KG |
| STEYR | X | 63 ±2 KG |
| STEYR | X | 63 ±2 KG |
| ------ | ------ | 63 ±2 KG |
| ------ | ------ | 63 ±2 KG |

SEATS MEET GRAMME
COMPLIANT TO
DELEGATED REGULAT
AND 167/2013 ARTI



<u>Drawing without inserted logo on seat cushion:</u>

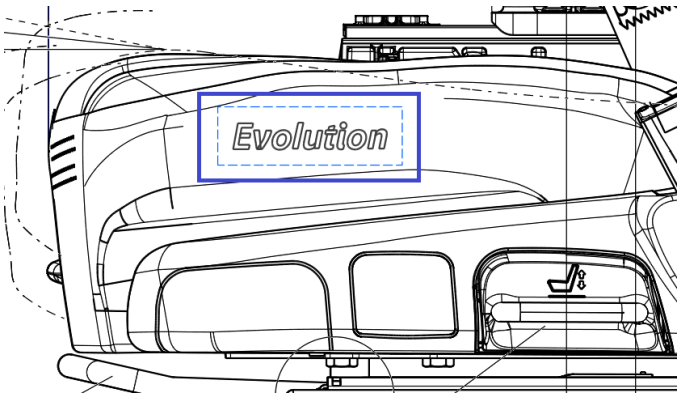

<u>How to insert orginal seat covers in 3D:</u>

1. Hide the part **Attention** in the seat cushion.

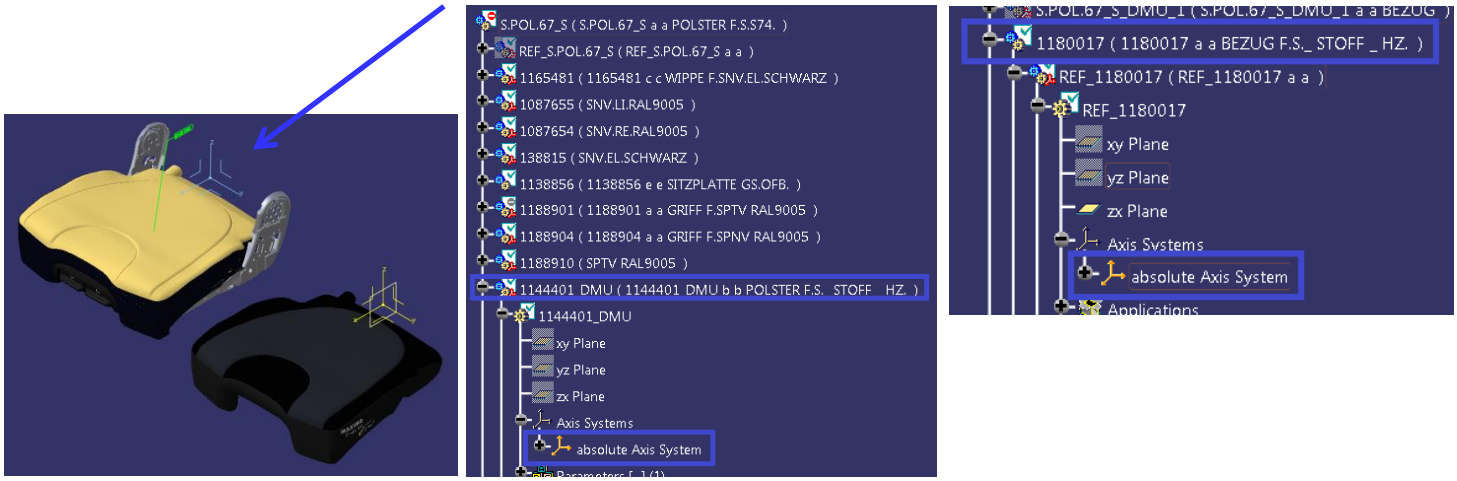


2. Place the axis system of the original-reference with the axis system of the DMU_cushion with **Congruence**.

## 5.4 Speciality: Aft adjustment

After positioning the aft adjustment, the required items have to be moved to the respective components.
(For example: „suspension“, „ structure“)

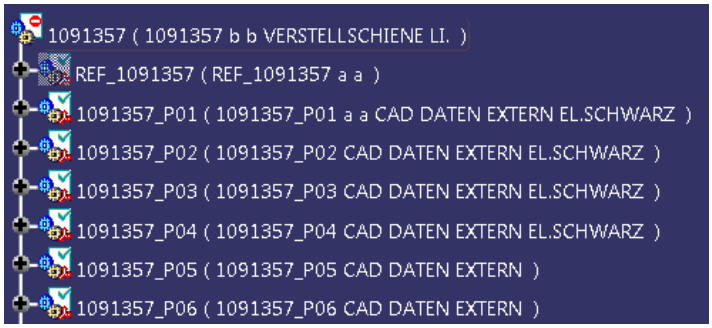


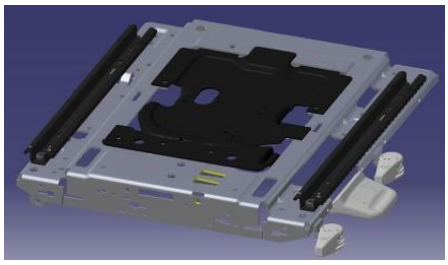

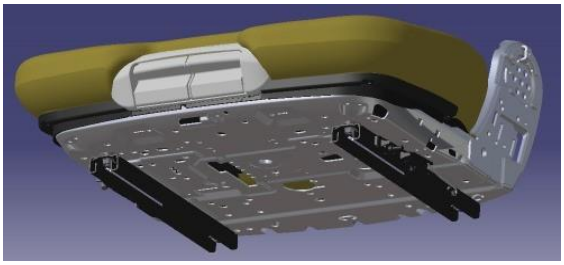

Tips and Tricks:
Use only visible parts in the DMU model, all non-visible parts must not be inserted or must be deleted.

Distance have to be 24.5 mm

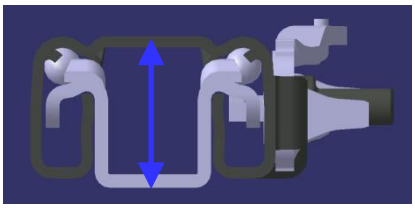

Distance have to be 26.5 mm

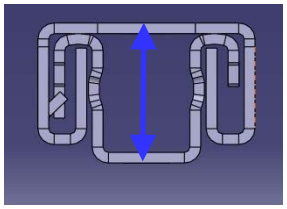

## 5.5 Basic models for DMU-creating

From these basic models, parts which are needed can be copied and pasted into the created model.

**The parts in the basic models are already positioned correctly!**

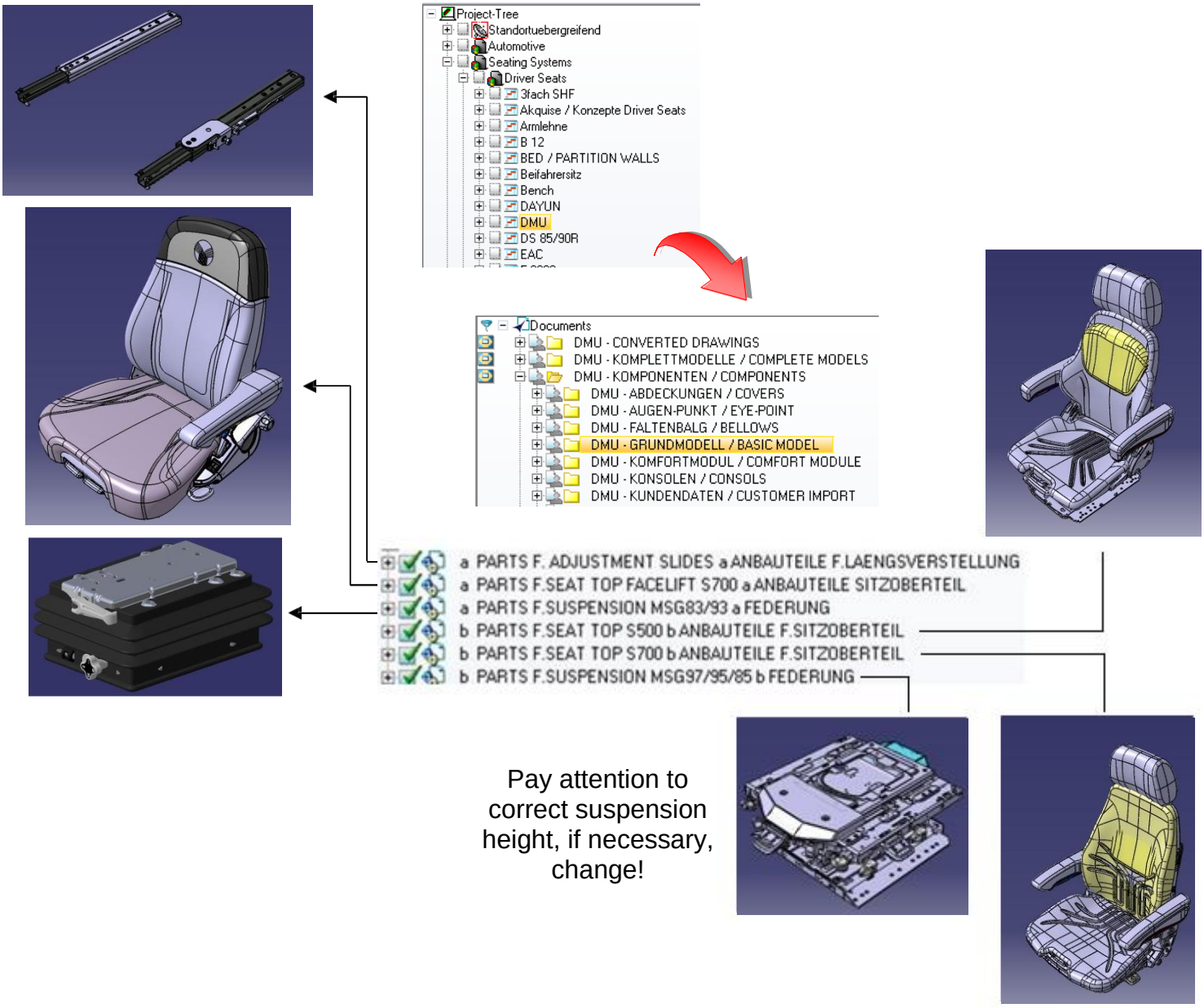


Pay attention to correct suspension height, if necessary, change!

**The basic models themselves, may not be directly installed in the DMU model.**

## 5.6 Speciality: Cable representation

Insert the wiring harness in the component **Suspension**, and align on suspension LP. After that, the wiring harness needs to be hidden.

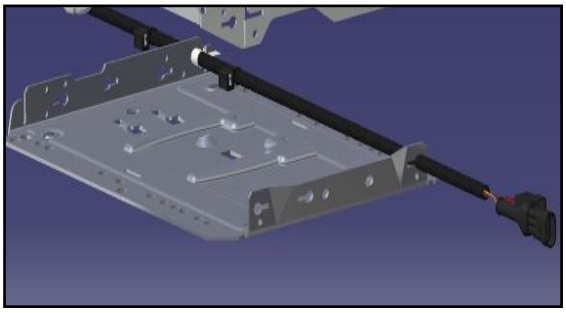

For correct representation of wiring harness on the drawing, a scene has to be generated. The same applies to the suspension LP.

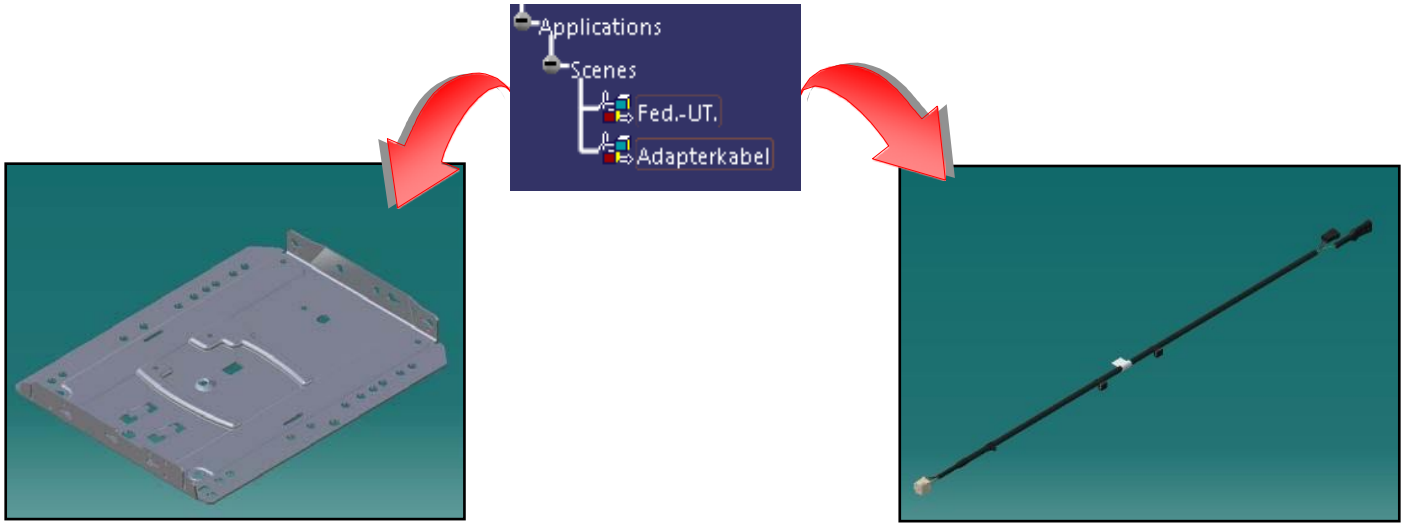

## 5.7 Conditions

- After positioning and moving the components, all conditions have to be deleted.
- The components in the respective components (backrest, structure, suspension, …) have to be fixed with the staple.

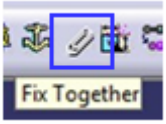


- **Fix** the components themselves.

Here an example, of how a structure-tree can look like:

## 6 Hinweise zu den SIP- und Aug-Punkten

The various SIP and EYE points are shown:

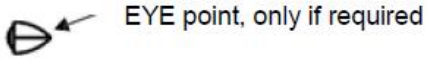


- Seat top S700
  - Back foaming cushions
  - Conventionally covered cushions

- Seat top S500

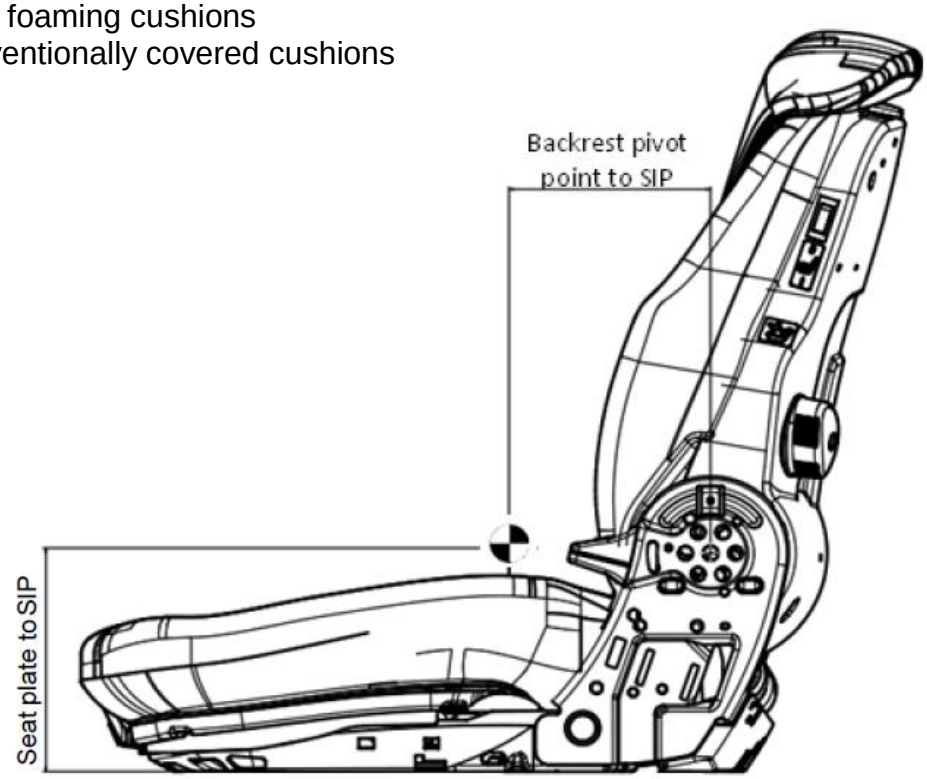


## 7 Darstellung von H-Punkt, SIP, SRP und Gurtanlenkpunkt

The description of H-Point, SRP, SIP and seat belt anchorage point in offer drawings (also in homologation drawings) is
regulated in the following way:

- H-point, SIP, SRP: Hatching of the circle „top right“ and „bottom left“.

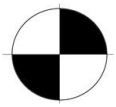

- Seat belt anchorage point: Hatching of the circle „top left“ and „bottom right“.

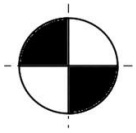

H-Point, SIP and SRP are inserted in the drawing from the 3D-model.
The seat belt anchorage point has to be inserted in the drawing with a 2D catalogue element. The diameter of the circle is 25 mm.

# 8 Selection SIP – S700 / S500 / conventionally cushions and special cushions

- **S500:**

NH/C-RD-DE9_2012

## SIP-Measurements of MSG65-75/S500

| Stand G | 06.11.2018 |
|---|---|

| Suspension | | | | | | | | | |
|---|---|---|---|---|---|---|---|---|---|
| Suspensiontype | | MSG65 Fork lift strength | | | MSG75 Fork lift- and construction machine strength | | | | |
| Total stroke suspension | | 60 | 70 | 80 | 60 | 70 | 80 | 110 | |
| Lower edge adjustment rail + thickness suspension lower part | | 29,5 | 29,5 | 29,5 | 29,5 | 29,5 | 29,5 | 29,5 | |
| Distance between lower edge suspension upper part and upper edge lower part | | 33,5 | 38,5 | 43,5 | 47,5 | 52,5 | 57,5 | 72,5 | |
| Half deflected | Lower edge adjustment rail to lower edge of suspension upper part | 63,0 | 68,0 | 73,0 | 77,0 | 82,0 | 87,0 | 102,0 | Regard height in customer drawings |

| | Seat top S5xx | | | | | | | | | | | | | | |
|---|---|---|---|---|---|---|---|---|---|---|---|---|---|---|---|
| | Seat top description | Comment | Seat cushion width | Seat cushion | Backrest cushion | Lower edge seat plate to SIP | | | | | | | | | Backrest pivot point to SIP |
| SIP 1 | Seat top S521 Standard | with/without SAI and heating | 400<br>450<br>470 | 1090485<br>1073502<br>1071222 | 1090484<br>1071223<br>1071223 | 137 | 200 | 205 | 210 | 214 | 219 | 224 | 239 | | 154 |
| | Seat top S522 Standard | with/without SAI and heating | 450<br>470 | 1073502<br>1071222 | 1089899<br>1089899 | | | | | | | | | | |
| SIP 2 | Seat top S521 Toyota with ORS Backrest | with/without SAI and heating | 470 | 1071222 | 1155959 | 139 | 202 | 207 | 212 | 216 | 221 | 226 | 241 | | 162 |
| SIP 3 | Seat top S521 Linde Gumotex | with/without SAI and heating | 480 | 1115036 | 1071223 | 147 | 210 | 215 | 220 | 224 | 229 | 234 | 249 | | 158 |
| | Seat top S521 Linde Turkey | with/without SAI and heating | 470 | 1224605 | 1224613 | 147 | 210 | 215 | 220 | 224 | 229 | 234 | 249 | | 158 |
| SIP 4 | Seat top S531 Bobcat- Design | with/without SAI and heating | 510 | 1182641 | 1182639 | 142 | 205 | 210 | 215 | 219 | 224 | 229 | 244 | | 166 |
| SIP 5 | Seat top FENDT- S511 GAG- Design for FENDT 21 MM FATTER | with/without SAI and heating | 400 | 1390514 | 1090484 | 158 | 221 | 226 | 231 | 235 | 240 | 245 | 260 | | 158 |
| SIP 6 | Seat top FENDT- S521 GAG- Design for FENDT 22 MM FATTER | with/without SAI and heating | 470 | 1390515 | 1071223 | 159 | 222 | 227 | 232 | 236 | 241 | 246 | 261 | | 157 |
| SIP 7 | S531- Seat Cushion combined with a Toyota Backrest Cushion | with/without SAI and heating | 510 | 1182641 | 1155959 | 145 | 208 | 213 | 218 | 222 | 227 | 232 | 247 | | 162 |
| | | | | | | Regard height in customer drawings | SIP-height in customer drawings (if adjustment rail height is 26.5mm) | | | | | | | | Regard depth in customer drawings |

Distance in driving direction:
**Forward displacement between suspension lower part and backrest pivot point is 27.5mm (mean)**
**Valid for all MSG65 and MSG75 with S500 seat top**

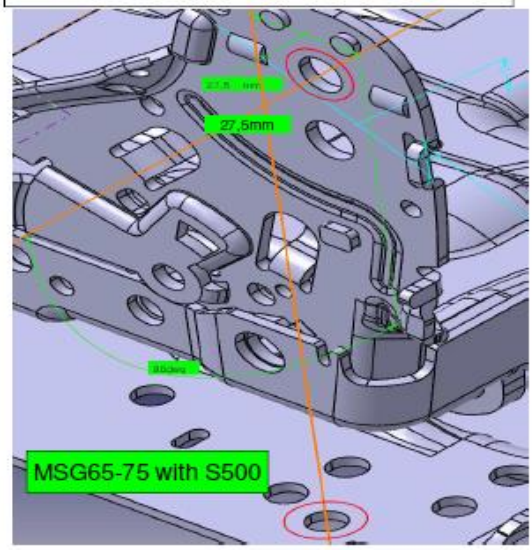

- **S700:**

13.11.2019

| | Description | collection drawing | Seatplate to SIP | Backrest pivot point to SIP | Eyepoint 2008/2 EG based to SIP |
|---|---|---|---|---|---|
| **Cushion foam-backed** (with active, mechanical and without LS) | | | | | |
| SIP1 | Seat top S72. w/o Seat Depth / Seat Angle Adj.<br>Seat top S72. w/o OPS | | 140 mm | 139 mm | ← 21mm ↑ 631mm |
| SIP2 | Seat top S72. w/o Seat Depth / Seat Angle Adj.<br>Seat top S72. with OPS | | 146 mm | 139 mm | ← 21mm ↑ 625mm |
| SIP3 | Seat top S72. with Seat Depth / Seat Angle Adj.<br>Seat top S73. with and w/o Seat Depth / Seat Angle Adj.<br>Seat top S72. and S73. w/o OPS<br>Seat top S72. w/o Seat Depth / Seat Angle Adj.<br>Seat top S72. w/o OPS<br>Cushion width from S72. - Cushion contour from S73. | 1313630 | 166 mm | 145 mm | 72. with ST/SN← 38mm ↑ 634mm<br>73. w/o ST/SN← 25,4mm ↑ 634mm<br>73. with ST/SN← 38mm ↑ 634mm |
| SIP4 | Seat top S72. with Seat Depth / Seat Angle Adj.<br>Seat top S73. with and w/o Seat Depth / Seat Angle Adj.<br>Seat top S72. and S73. with OPS<br>Seat top S72. w/o Seat Depth / Seat Angle Adj.<br>Seat top S72. with OPS<br>Cushion width from S72. - Cushion contour from S73. | 1313630 | 170 mm | 145 mm | 72. with ST/SN← 38mm ↑ 630mm<br>73. w/o ST/SN← 25,4mm ↑ 630mm<br>73. with ST/SN← 38mm ↑ 630mm |
| SIP5 | Seat top S74. w/o Seat Depth / Seat Angle Adj.<br>Seat top S74. w/o OPS | | 160 mm | 147 mm | ← 33mm ↑ 643mm |
| SIP6 | Seat top S74. w/o Seat Depth / Seat Angle Adj.<br>Seat top S74. with OPS | | 164 mm | 147 mm | ← 33mm ↑ 639mm |
| SIP7 | Seat top S74. with Seat Depth / Seat Angle Adj.<br>Seat top S74. w/o OPS | | 170 mm | 150 mm | ← 33mm ↑ 640mm |
| SIP8 | Seat top S74. with Seat Depth / Seat Angle Adj.<br>Seat top S74. with OPS | | 174 mm | 150 mm | ← 33mm ↑ 636mm |
| **Cushion foam-backed only for J.D. Cushiondesign** (with active, mechanical and without LS) | | | | | |
| SIP28 | Seat top S73. with and w/o Seat Depth / Seat Angle Adj.<br>Seat top S73. with OPS | FABRIC | 170 mm | 150 mm | 73. w/o ST/SN← 20,4mm ↑ 630mm<br>73. with ST/SN← 33mm ↑ 630mm |
| SIP4 | Seat top S73. with and w/o Seat Depth / Seat Angle Adj.<br>Seat top S73. with OPS | PVC | 170 mm | 145 mm | 73. w/o ST/SN← 25,4mm ↑ 630mm<br>73. with ST/SN← 38mm ↑ 630mm |
| SIP3 | Seat top S73. with and w/o Seat Depth / Seat Angle Adj.<br>Seat top S73. w/o OPS | PVC | 166 mm | 145 mm | 73. w/o ST/SN← 25,4mm ↑ 634mm<br>73. with ST/SN← 38mm ↑ 634mm |
| **Cushion foam-backed only for Caterpillar** (with active, mechanical and without LS) | | | | | |
| SIP29 | Seat top S73. w/o Seat Depth / Seat Angle Adj.<br>Seat top S73. w/o OPS | | 171 mm | 176 mm | |

13.11.2019

| | Description | collection drawing | Seatplate to SIP | Backrest pivot point to SIP | Eyepoint 2008/2 EG based to SIP |
|---|---|---|---|---|---|
| **EVO – Cushion** (conventional upholstered with aktive LS / CLIMATE) | | | | | |
| SIP9 | Seat top S74. with Seat Depth / Seat Angle Adj.<br>Seat top S74. with OPS | | 190 mm | 164 mm | ← 36mm ↑ 645mm |
| SIP10 | Seat top S72. and S73. with Seat Depth / Seat Angle Adj.<br>Seat top S72. and S73. with OPS | | 190 mm | 164 mm | ← 36mm ↑ 638mm |
| **EVO - special Cushion Same synthetic leather** (conventional upholstered with aktive LS / CLIMATE) | | | | | |
| SIP18 | Seat top S74. EVO with Seat Depth / Seat Angle Adj.<br>Seat top S74. EVO with OPS | | 190 mm | 151 mm | ← 49mm ↑ 645mm |
| **EVO - special Cushion John Deere** (conventional upholstered with aktive LS / CLIMATE) | | | | | |
| SIP23 | Seat top S74. EVO with Seat Depth / Seat Angle Adj.<br>Seat top S74. EVO with OPS | 10MM THINNER EVO -CUSHION | 180 mm | 164 mm | ← 36mm ↑ 655mm |
| SIP31 | Seat top S742 EVO with Seat Depth / Seat Angle Adj.<br>Seat top S742 EVO with OPS | UPHOLSTERED EVO-CUSHION | 206 mm | 182 mm | ← 16mm ↑ 658mm |
| **EVO - special Cushion** (conventional upholstered with mechanical LS / w/o CLIMATE) | | | | | |
| SIP25 | Seat top S74. EVO with Seat Depth / Seat Angle Adj.<br>Seat top S74. EVO w/o OPS | | 180 mm | 164 mm | ← 36mm ↑ ???mm |
| **EVO - FACELIFT - Cushion** (conventional upholstered with aktive LS) | | | | | |
| SIP24 | Seat top S74. EVO with Seat Depth / Seat Angle Adj.<br>Seat top S74. EVO mit OPS | | 190 mm | 180 mm | ← 20mm ↑ 645mm |
| **FACELIFT – Cushion** (conventional upholstered with aktive LS) | | | | | |
| SIP19 | Seat top S74. FACELIFT with Seat Depth / Seat Angle Adj.<br>Seat top S74. FACELIFT with OPS | | 182 mm | 170 mm | ← 30mm ↑ ???mm |
| SIP21 | Seat top S74. FACELIFT with Seat Depth / Seat Angle Adj.<br>Seat top S74. FACELIFT w/o OPS | | 178 mm | 170 mm | ← 30mm ↑ ???mm |
| **FACELIFT – Cushion** (conventional upholstered with mchanical LS) | | | | | |
| SIP20 | Seat top S74. FACELIFT with Seat Depth / Seat Angle Adj.<br>Seat top S74. FACELIFT with OPS | | 182 mm | 177 mm | ← 23mm ↑ ???mm |
| SIP22 | Seat top S74. FACELIFT with Seat Depth / Seat Angle Adj.<br>Seat top S74. FACELIFT w/o OPS | | 178 mm | 177 mm | ← 23mm ↑ ???mm |

13.11.2019

| | Description | collection drawing | Seatplate to SIP | Backrest pivot point to SIP | Eyepoint 2008/2 EG based to SIP |
|---|---|---|---|---|---|
| **Cushion conventional Standard** (with active and mechanical LS, without LS) | | | | | |
| SIP30 | Seat top S72. w/o Seat Depth / Seat Angle Adj.<br>Seat top S72. with OPS | | 152 mm | 153 mm | w/o Heating ← 30mm ↑ 654mm<br>with Heating ← 30mm ↑ 664mm |
| SIP11 | Seat top S72. with Seat Depth / Seat Angle Adj.<br>Seat top S72. w/o OPS | | 178 mm | 145 mm | w/o Heating ← 38mm ↑ 628mm<br>with Heating ← 38mm ↑ 638mm |
| SIP12 | Seat top S72. with Seat Depth / Seat Angle Adj.<br>Seat top S72. with OPS | | 186 mm | 145 mm | w/o Heating ← 38mm ↑ 620mm<br>with Heating ← 38mm ↑ 630mm |
| SIP13 | Seat top S74. w/o Seat Depth / Seat Angle Adj.<br>Seat top S74. w/o OPS | | 178 mm | 147 mm | w/o Heating ← 36mm ↑ 628mm<br>with Heating ← 36mm ↑ 638mm |
| SIP14 | Seat top S74. with Seat Depth / Seat Angle Adj.<br>Seat top S74. with OPS | | 186 mm | 147 mm | w/o Heating ← 36mm ↑ 620mm<br>with Heating ← 36mm ↑ 630mm |
| **Cushion conventional only for Komatsu** | | | | | |
| SIP17 | Seat top S72. with Seat Depth / Seat Angle Adj.<br>Seat top S72. w/o OPS | | 166 mm | 145 mm | w/o Heating ← 38mm ↑ 640mm<br>with Heating ← 38mm ↑ 650mm |
| **Cushion conventional only for Caterpillar** | | | | | |
| SIP26 | Seat top S73. with Seat Depth / Seat Angle Adj.<br>Seat top S73. with OPS | | 167 mm | 172 mm | |
| SIP27 | Seat top S73. with Seat Depth / Seat Angle Adj.<br>Seat top S73. with and w/o OPS | | 171 mm | 173 mm | |
| **Special Cushion (SC foam backed, BC conventional upholstered)** | | | | | |
| SIP15 | Seat top S73. with Seat Depth / Seat Angle Adj.<br>Seat top S73. with OPS | | 170 mm | 155 mm | with Heating ← 28mm ↑ 630mm |
| SIP16 | Seat top S72. with Seat Depth / Seat Angle Adj.<br>Seat top S72. with OPS | | 146 mm | 155 mm | with Heating ← 28mm ↑ 630mm |

13.11.2019

| | Description | collection drawing | Seatplate to SIP | Backrest pivot point to SIP | Eyepoint 2008/2 EG based to SIP |
|---|---|---|---|---|---|
| **Cushion conventional Standard** (with active and mechanical LS, without LS) | | | | | |
| SIP32 | Seat top S741 with Seat Depth / Seat Angle Adj.<br>Seat top S741 w/o OPS | | 172 mm | 171 mm | |
| SIP33 | Seat top S741 with Seat Depth / Seat Angle Adj.<br>Seat top S741 with OPS | | 176 mm | 171 mm | |
| SIP34 | Seat top S742 with Seat Depth / Seat Angle Adj.<br>Seat top S742 w/o OPS | | 172 mm | 159 mm | |
| SIP35 | Seat top S742 with Seat Depth / Seat Angle Adj.<br>Seat top S742 with OPS | | 176 mm | 159 mm | |
| SIP36 | Seat top S722 with Seat Depth / Seat Angle Adj.<br>Seat top S722 w/o OPS | | 177 mm | 160 mm | |
| SIP37 | Seat top S722 with Seat Depth / Seat Angle Adj.<br>Seat top S722 with OPS | | 181 mm | 160 mm | |

# 9 Indications for suspension heights

## 9.1 Indication for suspension height MSG 97

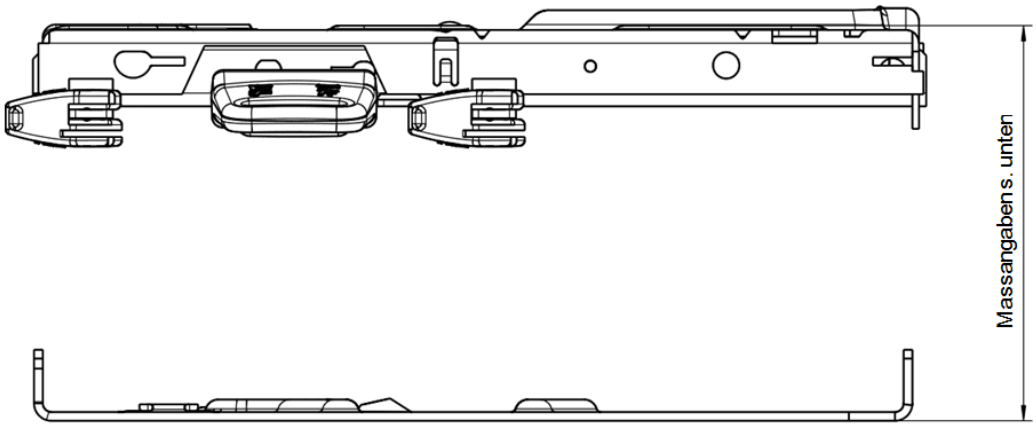


Dimension = suspension LP to mounting surface suspension UP

- MSG 97 suspension (G/GL/A/AL/EL) 180 mm (FW50/50, HV 40/40)
- MSG 97 suspension (G/GL/A/AL/EL) 170 mm (FW50/50; HV 30/30)
- MSG 97 suspension (EL) 160mm (FW30/70; HV 40/40)
- MSG 97 suspension (EAC) 182mm (FW60/60; HV 40/40)

## 9.2 Indication for suspension height MSG 95

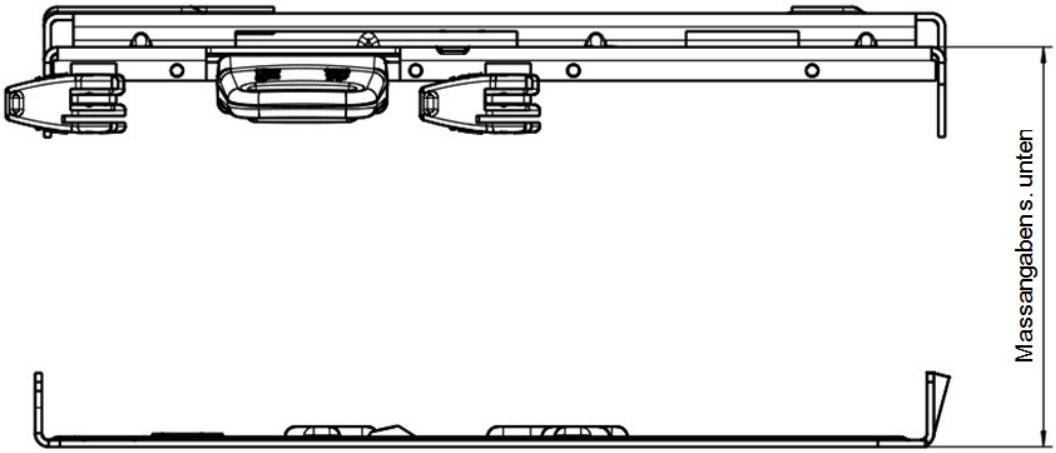


Dimension = suspension LP to mounting surface suspension UP

- MSG 95 suspension (G/GL/A/AL/EL) 178 mm (FW50/50, HV 40/40)
- MSG 95 suspension (G/GL/A/AL/EL) 168 mm (FW50/50; HV 30/30)
- MSG 95 suspension (EL) 158mm (FW30/70; HV 40/40)
- MSG 95 suspension (EAC) 180mm (FW60/60: HV 40/40)

## 9.3 Indication for suspension height MSG 93

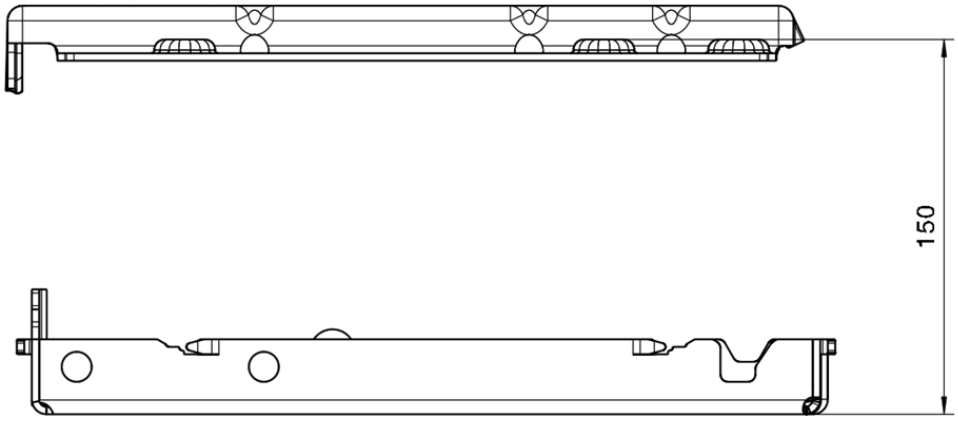


Dimension = suspension LP to mounting surface suspension UP: 150 mm

## 9.4 Indication for suspension height MSG 85 „H“

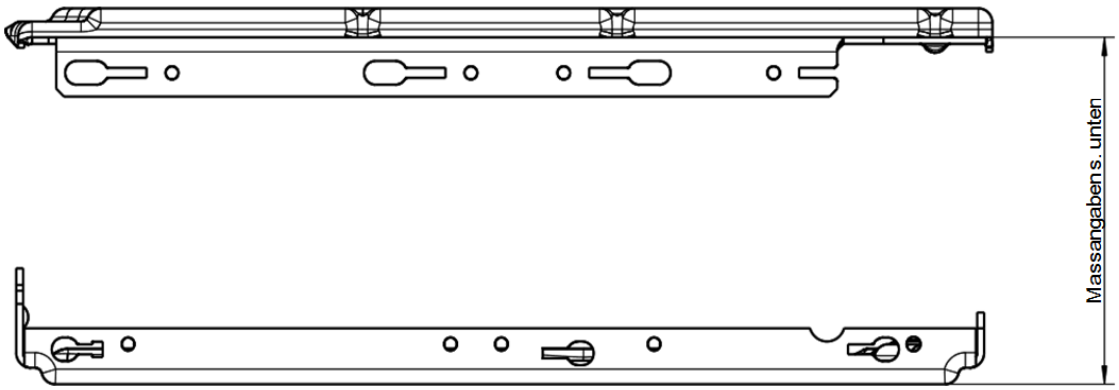


Dimension = suspension LP to mounting surface suspension UP

- MSG 85 suspension without HV 89 mm (FW35/35, HV --/--)
- MSG 85 suspension 119 mm (FW40/40; HV 30/30)
- MSG 85 suspension 129 mm (FW50/50; HV 30/30)

## 9.5 Indication for suspension height MSG 85 „H1“

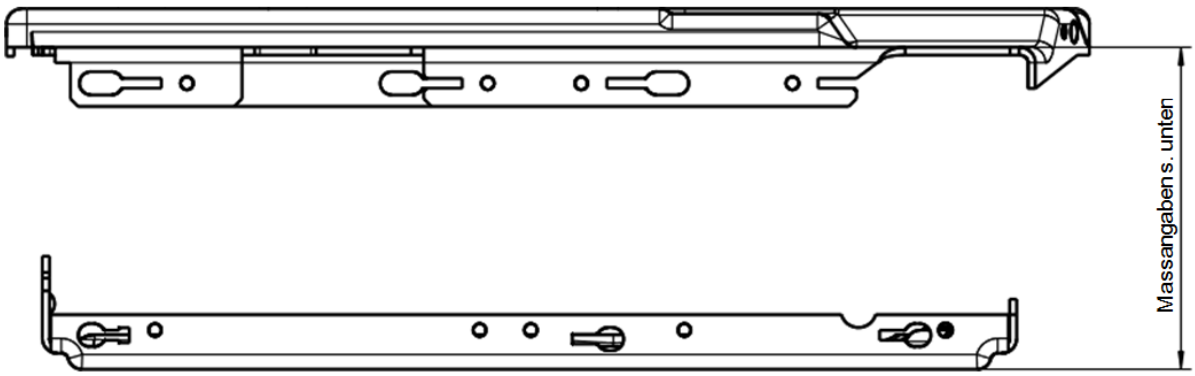


Dimension = suspension LP to mounting surface suspension UP

- MSG 85 suspension with H1 upper part — 125 mm (FW40/40, HV 30/30)
- MSG 85 suspension with H1 upper part — 135 mm (FW50/50;HV0/30/60/(80) drawn HV30)

## 9.6 Indication for suspension height MSG 83

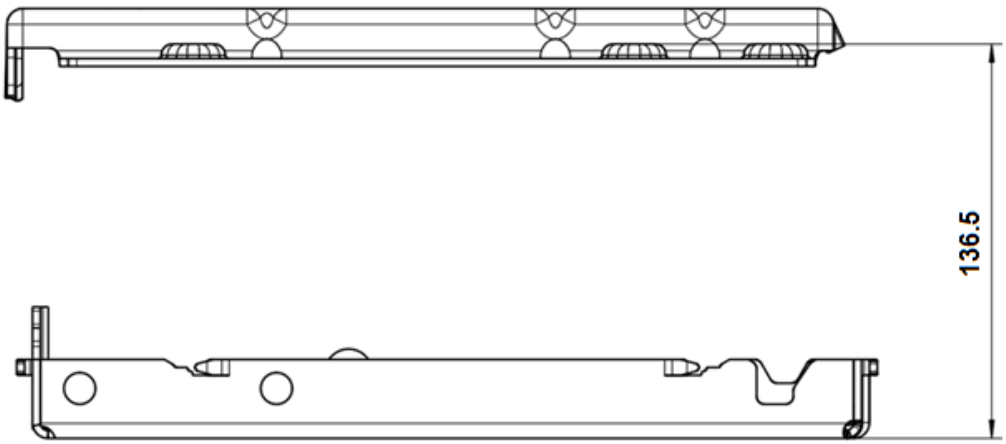


Dimension = suspension LP to mounting surface suspension UP: 136.5 mm

## 9.7 Indication for suspension height MSG 75

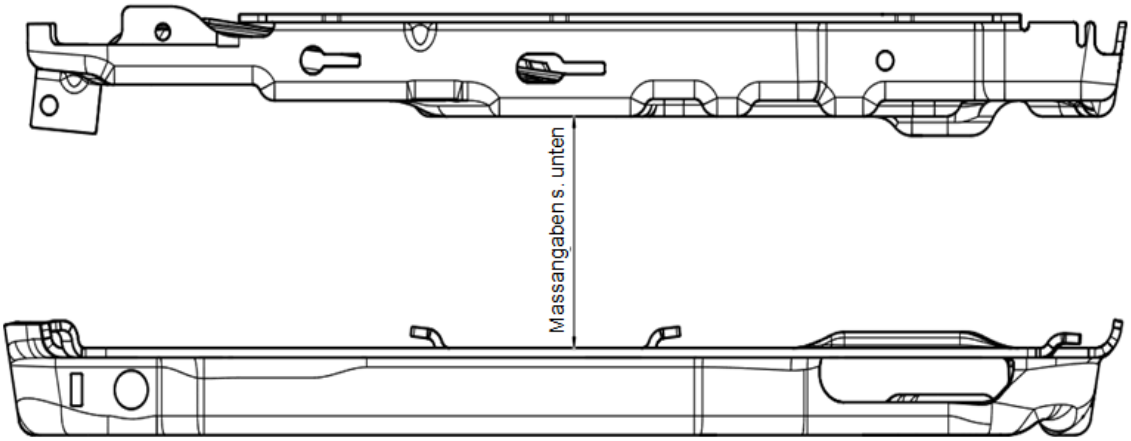


- MSG 75 suspension 47.5 mm (suspension stroke complete 60 mm)
- MSG 75 suspension 52.5 mm (suspension stroke complete 70 mm)
- MSG 75 suspension 57.5 mm (suspension stroke complete 80 mm)
- MSG 75 suspension 72.5 mm (suspension stroke complete 110 mm)

## 9.8 Indication for suspension height MSG 65

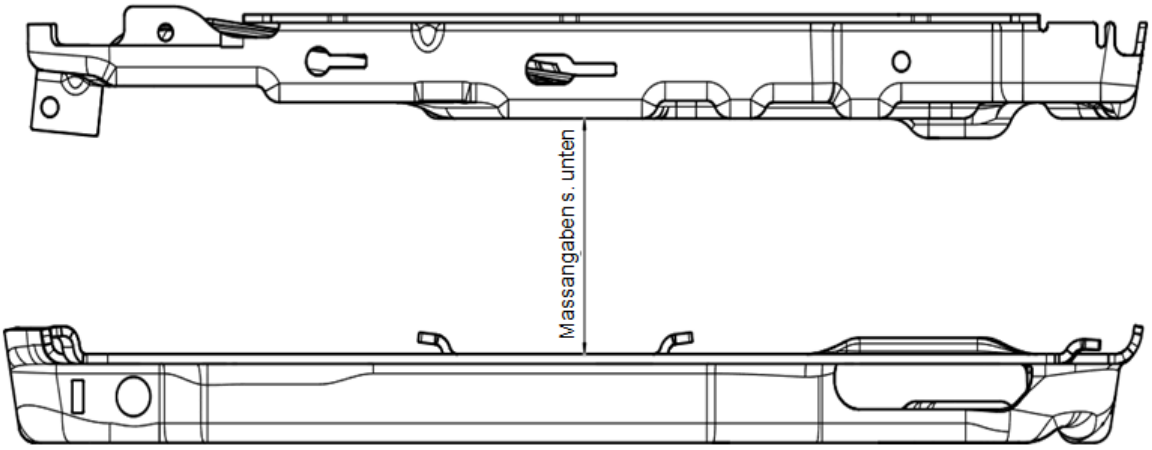


- MSG 65 suspension 33.5 mm (suspension stroke complete 60 mm)
- MSG 65 suspension 38.5 mm (suspension stroke complete 70 mm)
- MSG 65 suspension 43.5 mm (suspension stroke complete 80 mm)

## 9.9 Indication for suspension height MSG 285

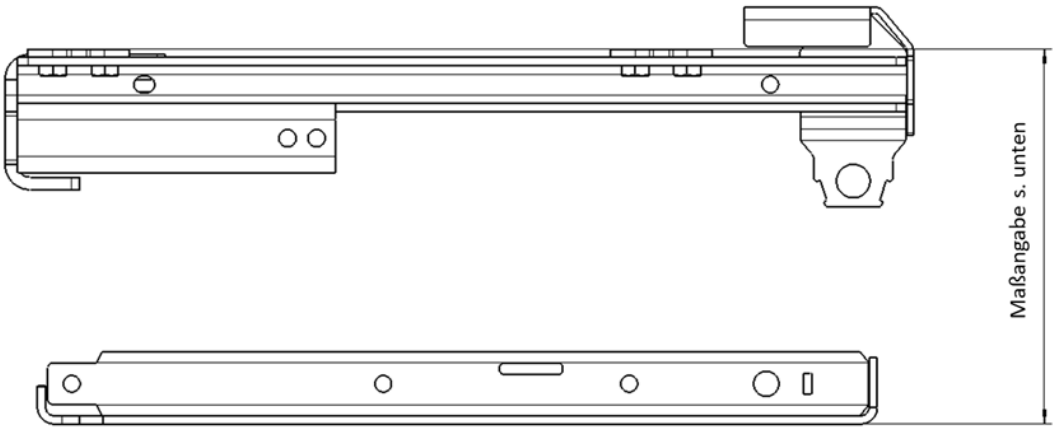


- MSG 285 / HV 60 / suspension stroke complete: 170 mm
- MSG 285 / HV 80 / suspension stroke complete: 180 mm

# 10 Positioning suspension lower part MSG 65 / 75

**Relevant for all MSG 65 and MSG 75, with S500 and S700!**

<u>Distance in driving direction:</u>
The distance between the back pivot point and the last outer bore of the suspension lower part have to be at **S500 27.5 mm** and at **S700 66 mm.**

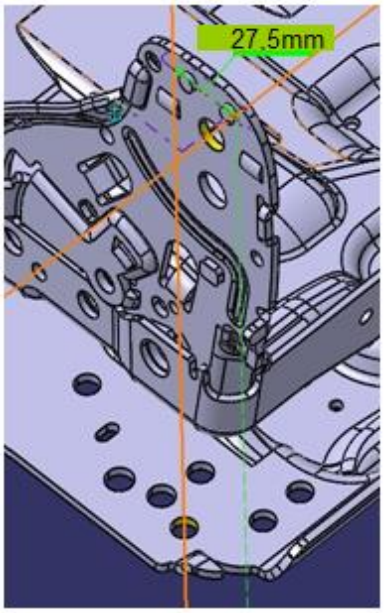


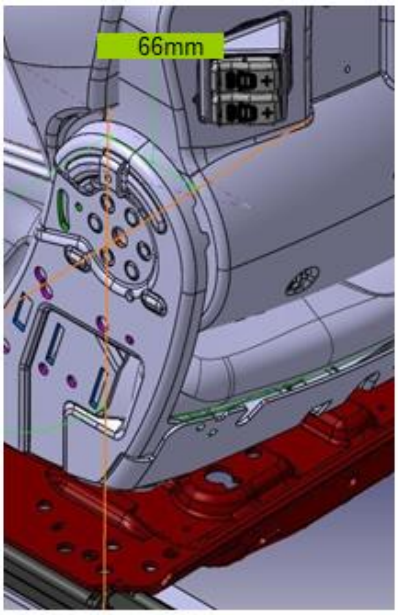

# 11 Creating an AZ

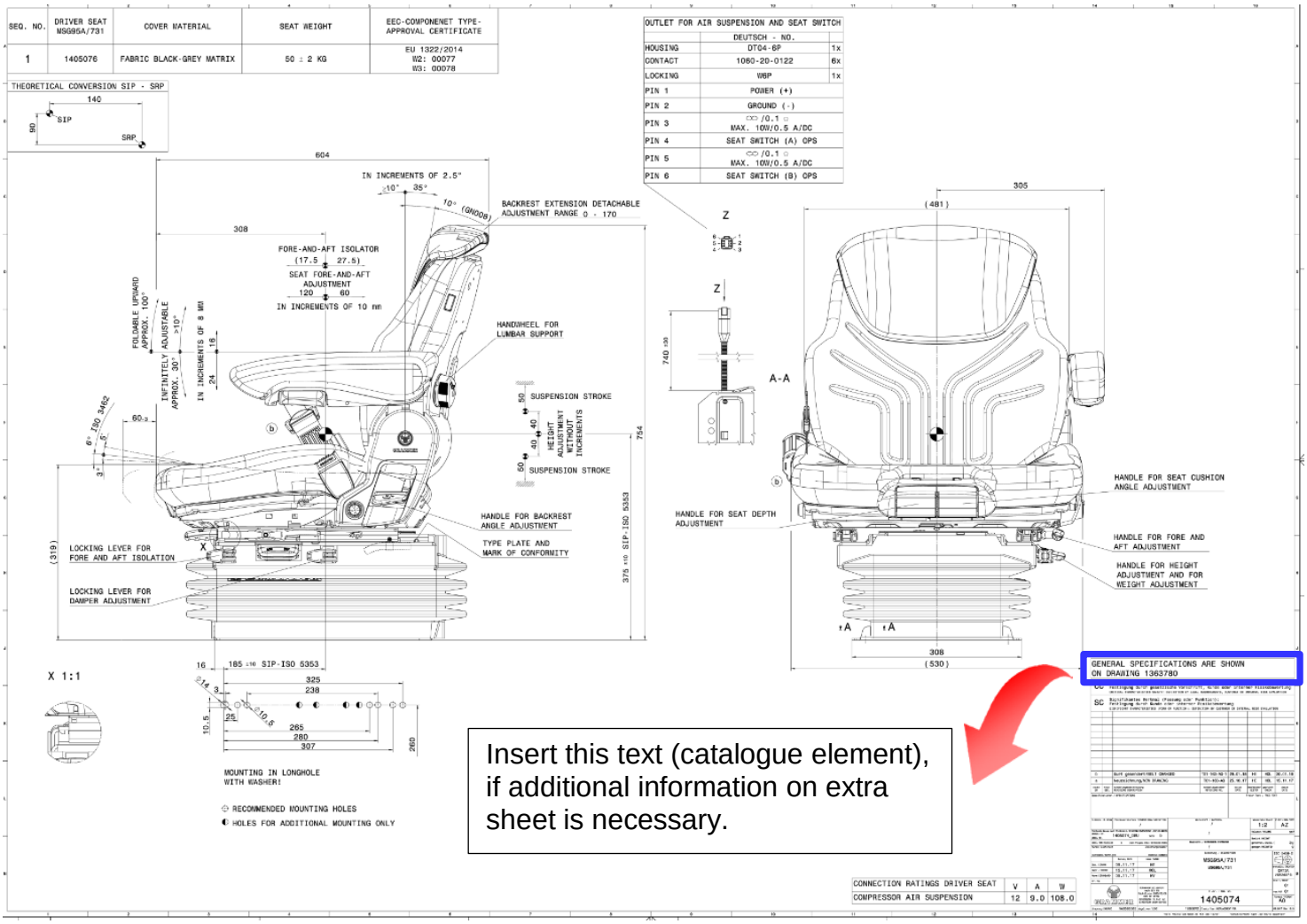


Insert this text (catalogue element), if additional information on extra sheet is necessary.

| | Font sizes |
|---|---|
| view specifications, details, sections,reference numbers, scales | 7 |
| inventory number in drawings | 5 |
| entry in table<br>geometrical tolerances<br>notes/comments<br>dimensioning/dimensional tolernaces<br>surface specifications<br>text declarations<br>indices<br>(all textes in capital letters) | 5 |

**Valid from May 2016**

<u>Guidelines:</u>

- size A0
- Standard AZ_MZ_GAG_V1_0
- scale 1:2
- front view
- side view in driver direction
- all information only in ENGLISCH
- delete the text „Massgebend ist der deutsche Text/…“!
- always indicate weight in table
- add note for text badge

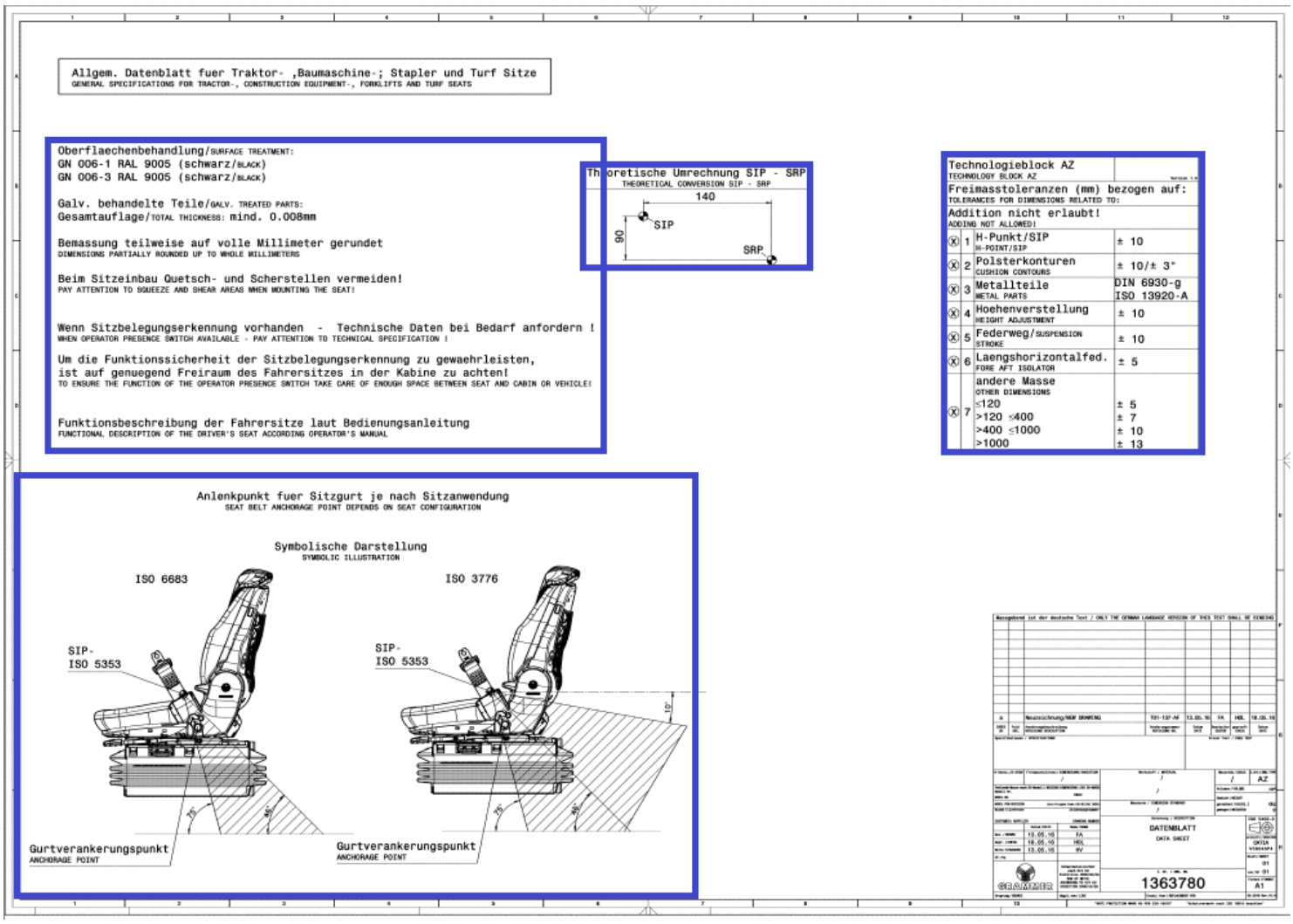


**Blue** marked areas: Optional specification for offer drawings. If necessary, please use this drawing (1363780) and refer in offer drawing above the title block.

GENERAL SPECIFICATIONS ARE SHOWN
ON DRAWING 1363780

# 12 Creating an AZ for CNH

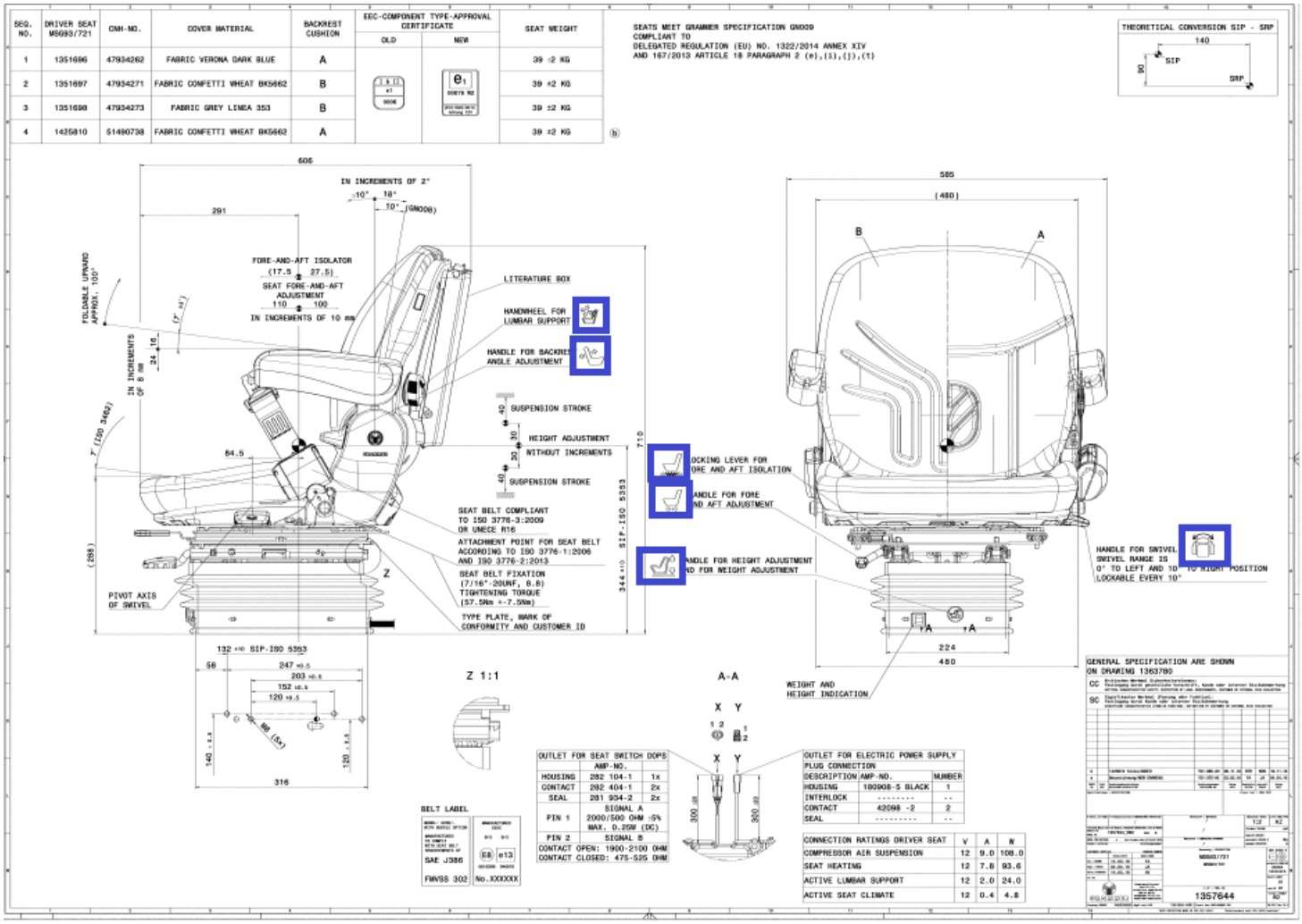


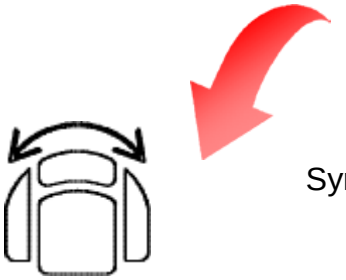

Symbol pictures for control elements (catalogue items); only for customer CNH.

# 13 Creating an AZ: SmarTeam

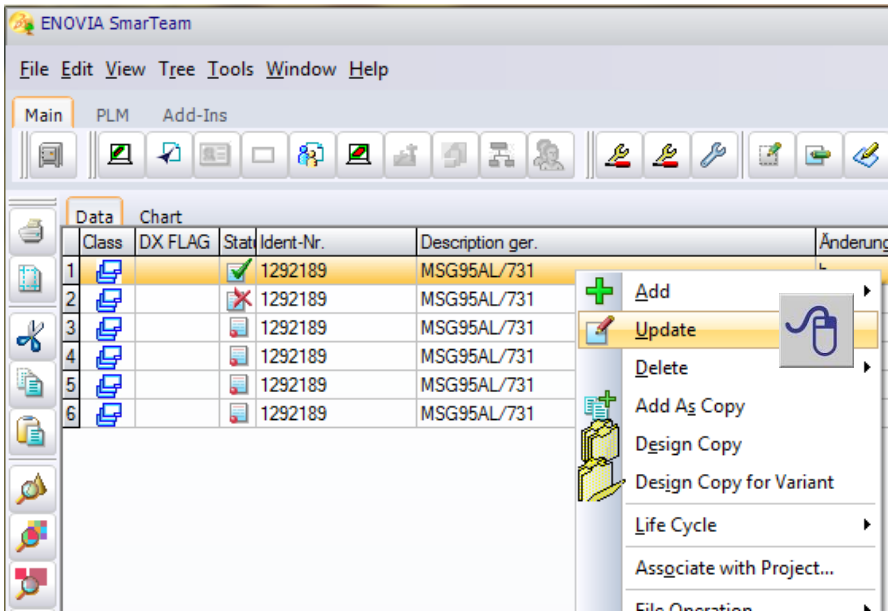


In the naming is the type of seat without the sign FHR. insert.

No weight insert!

For offer drawings the attribute „AZ“ have to be inserted at Doc. Type in Profile Card (SmarTeam)

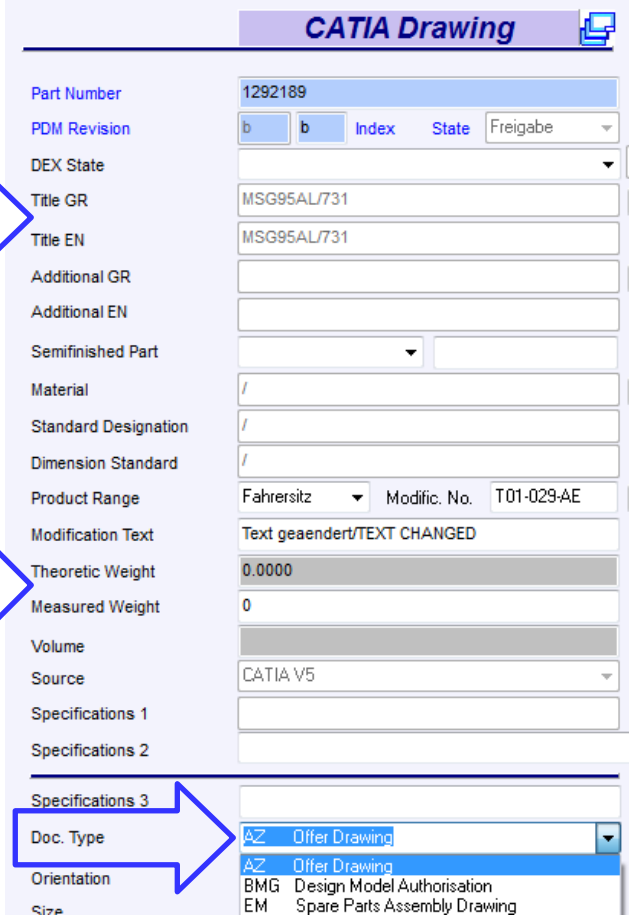

# 14 Ansichtserstellung: Lochbild

**1. <u>Step:</u>**
Create a bottom view with the function **Projected view**.

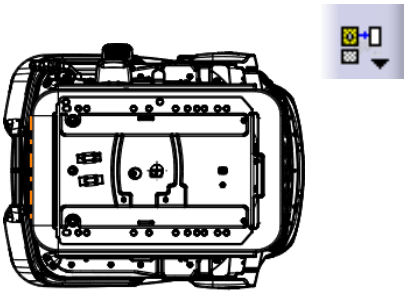

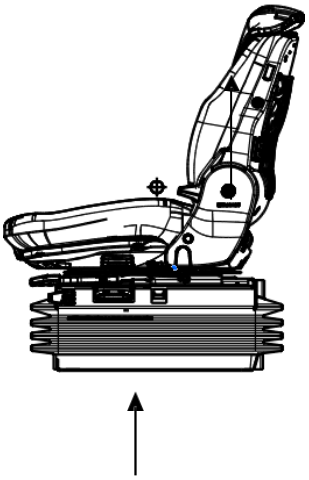

**2. <u>Step:</u>**

Remove all unnecessary lines.

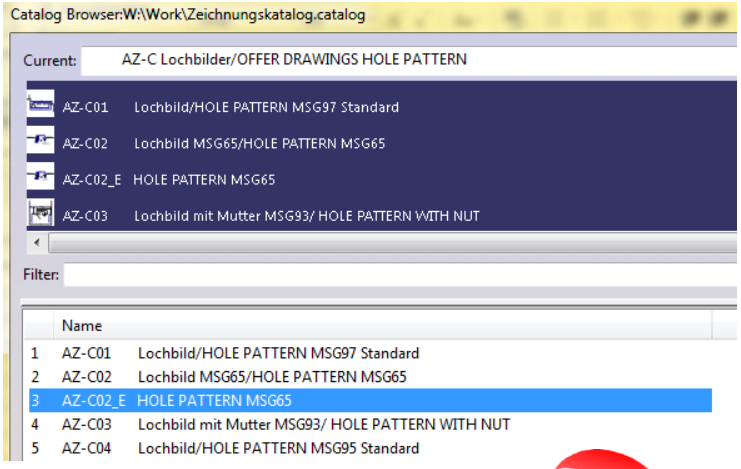


**3. <u>Step:</u>**
Load the dimension for the hole pattern from the drawing catalogue and place it directly over the hole pattern.

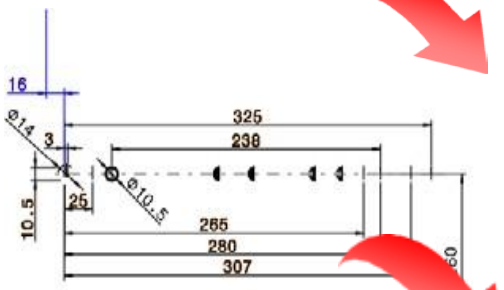




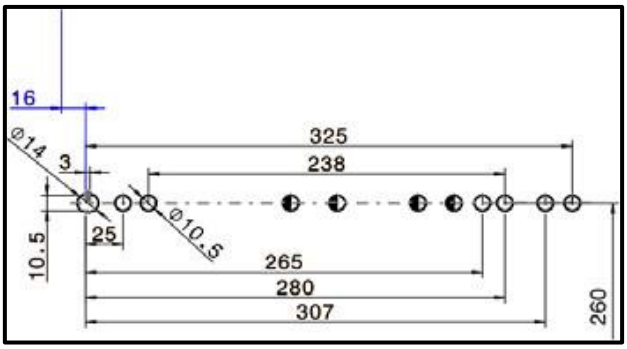

# 15 Creating the view: Cabel

In each case, create a view from the suspension lower part and the cable from the appropriate scene and change the scale to 1:2.

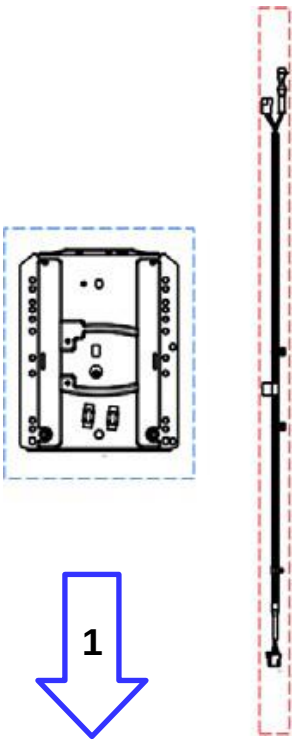


Cut the suspension lower part with the function **Details.**

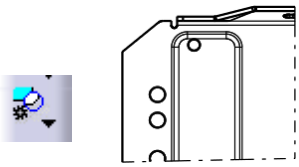

Click the view of the suspension base after selecting the condition **Superpose.**

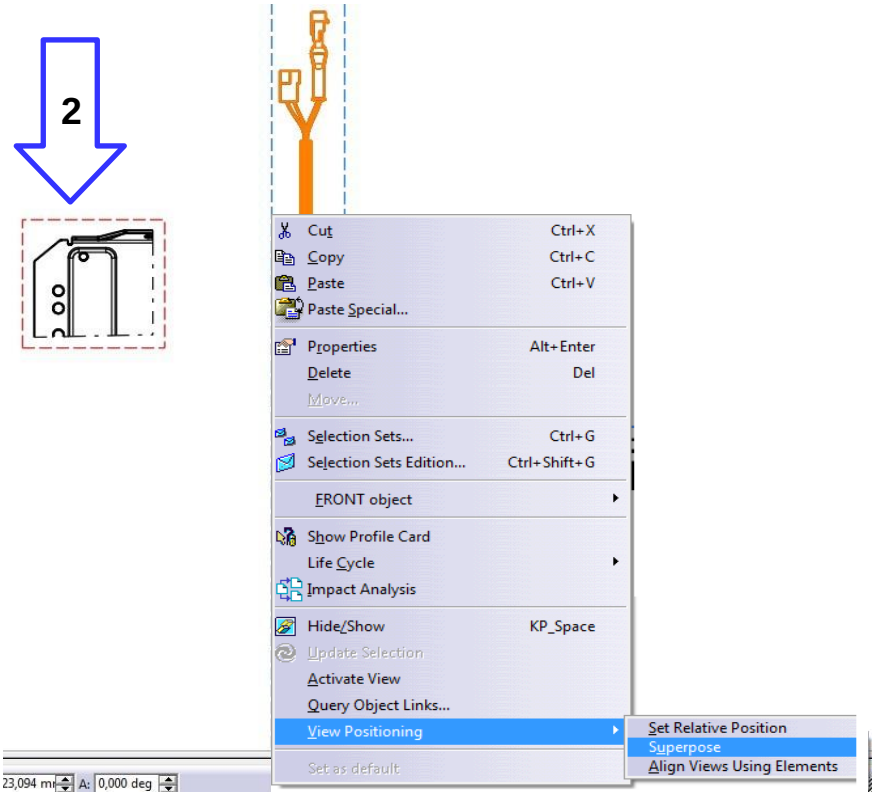


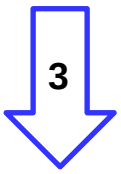

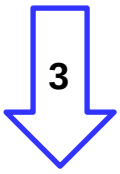


Delete the overlapping lines of harness after inserting an interruption.

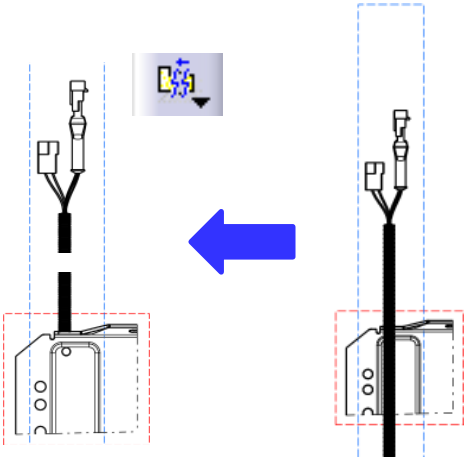

## 16 Checklist for DMU models

- Use released parts
- Use the right SIO
- Consider suspension height
- Use single pars (z.B. adjustment rail, armrest)
- Create scenes for cable representation at the drawing
- Fix the components

# 17 Applicable documents

| | |
|---|---|
| | |
| | |

# 18 Changes

08/2019
Takeover from Grammer Intranet

10/2019
Chapter 9: Translations customized
Chapter 9, New Point 9.9

*11/2019*
*SIP for S700 updated*