Work Instruction

015 Research + Development

MuCell®-oriented Component Design

W_015_031

Rev.	*Date*	*Created by*	*Date*	*Proved by*	*Date*	*Released by*	*Date*
00	04.06.2014	Stuiber Martin	11.04.2014	Kurz Helmut	22.05.2014	Delling Gerhard	22.05.2014

Rev.	*Date*	*Changed by*	*Date*	*Proved by*	*Date*	*Released by*	*Date*
01							

1 Purpose

This work instruction contains specifications for the production-oriented design of thermoplastic foam injection moulded components that are to be manufactured using physical foaming with the MuCell® process. This work instruction is confined to specifications that differ from conventional solid injection moulding.

2 Scope

GRAMMER AG R&D worldwide.

The specifications of this work instruction apply to all components that are to be manufactured using physical foaming with the MuCell® process.

3 Terminology

TSG
The umbrella term Thermoplastic Foam Injection Moulding (TSG) embraces physical and chemical processes where foam structures are created in thermoplastic injection moulded parts through the addition of propellants.

MuCell®
The MuCell® injection moulding process is a physical TSG process. The inert gas nitrogen (very occasionally carbon dioxide as well) is added to the thermoplastic polymer melt as a propellant and mixed in the melt cylinder to create a single-phase solution. When this single-phase solution is injected into the cavity of the injection moulding tool, the mixture experiences a drop in pressure that causes the gas distributed over the component to nucleate and billions of tiny cells to grow. These cells then replace a defined volume, leading to a density reduction in the component.

Foam rate
The foam rate is the percentage of the reduction in weight of the finished component. The reference figure is the component weight from solid injection moulding. The usual foam rate is 10% for applications within the scope of this work instruction.

Density reduction
Synonym for foam rate

Gas content
The gas content is the percentage of propellant in the polymer melt. The usual value for gas content is 0.5% for applications within the scope of this work instruction.

Practical example:

PA6 GF 30 MuCell® 7.5% foam rate =	7.5% reduction in component density corresponding gas content 0.2%

4 Responsibilities

The implementation of and compliance with this work instruction are the responsibility of the component designer, the product developer and the vice president R&D.

5 Description

5.1 Sample applications for MuCell®

Components with the following properties are particularly suitable for the MuCell® process:

Heavy, big or large-surface plastic parts upwards of 500 grams in weight or shot weight

Components which

- should be optimised to reduce weight
- have unwanted sink marks
- have large flat surfaces with considerable warpage
- have very uneven shrinkage
- cannot be filled in solid injection moulding due to thin walls
- have big flow path / wall thickness ratios
- do not need class A visible surfaces
- do not need high elongations at break (not suitable, for example, for head boxes in headrests!)

Sample applications for MuCell® at GRAMMER

Support structure for center consoles

Support BR205

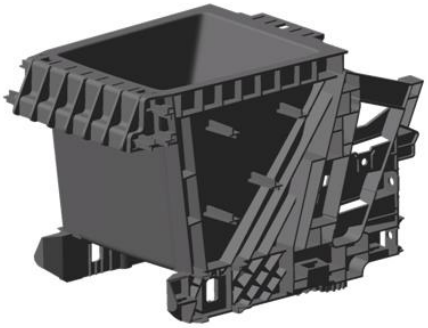

Retainer VW48x

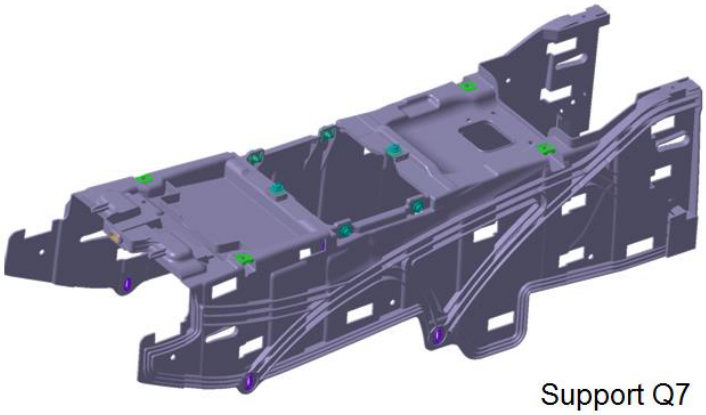

Support Q7

Air duct center console

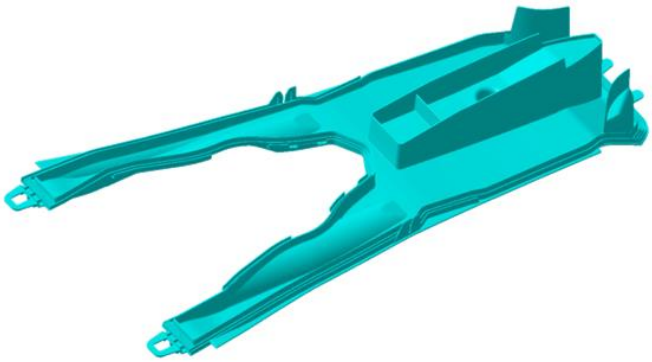

Cover Air duct BR205

Laminated components

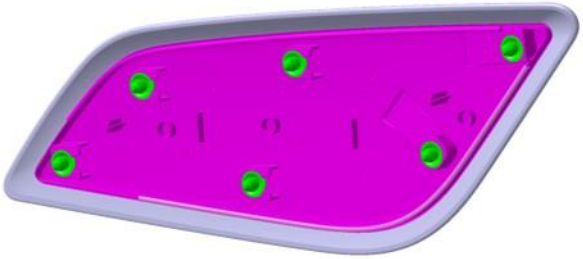

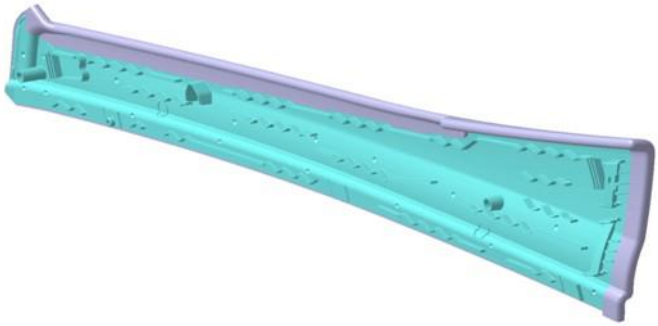

Insert armrest lid

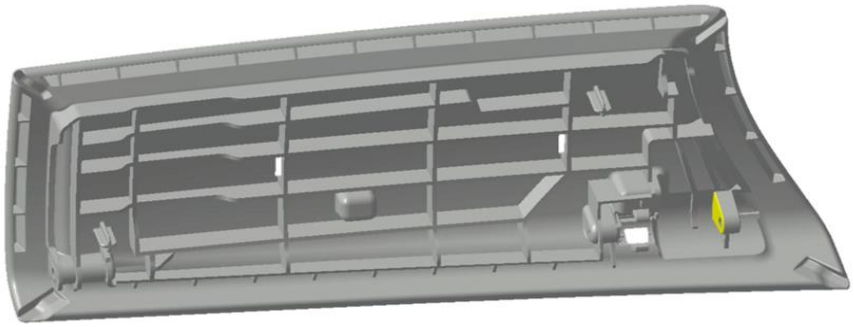

5.2 Advantages and disadvantages of MuCell® technology

5.2.1 Advantages of the MuCell® process

5.2.1.1 Cost advantages of MuCell® compared with solid injection moulding:

Cost savings due to:

- less material
  - due to gas content: roughly 10% reduction in weight
  - due to design possibilities of the MuCell® process: roughly 10% reduction in weight

- shorter cycle time
- smaller injection moulding machine possible

5.2.1.2 Technical and design advantages of MuCell® compared with solid injection moulding:

- No sink marks
- Lighter component
- Load-oriented design possible, i.e. rib thickness ratio 1:1 possible
- Reinforcement ribs can be made thicker
- Minimisation of warpage = less component warpage
- Thinner basic wall thicknesses possible
- Lowering of the melt viscosity and improvement in flow properties, resulting in considerable reduction in maximum clamping forces required
- Omission of the holding pressure phase and even distribution of pressure in the tool
- High dimensional stability

5.2.2 Disadvantages of the MuCell® process

- Investment costs
- Additional units are needed
- Additional material in the form of gas (N^2 or CO^2)

Design disadvantages of MuCell® compared with solid injection moulding

- No class A visible surfaces possible
- Material characteristics are impaired: strength, stiffness, elongation at break, impact strength
- Painting not possible because of gas emissions and surface defects
- Wall thickness accumulations more critical = more expensive
- Not permitted for head boxes and other head impact parts (low impact strength)!

5.3 MuCell® for special applications

Details can be found in 5.15

- MuCell® with visible components – approval necessary!
- MuCell® with film-laminated components – approval necessary!
- MuCell® with flocked components – approval necessary!
- MuCell® with painted components – not permitted!
- MuCell® for welding process – permitted

5.4 Main design specifications for MuCell®

5.4.1 Avoid MATERIAL ACCUMULATION!

Basic wall thickness should only be exceeded by 25%.

Larger material accumulations lengthen the cycle time and thereby increase costs.

This applies particularly to functional areas.

Reason: The boundary layer cannot withstand the internal gas pressure.

At these hot spots, the pressure can cause the component to swell out.
This is known as the post-blow effect.

5.4.2 Pay attention to the DRAFT ANGLE!

As with the core shrinkage in solid injection moulding, a kind of “core shrinkage” takes place in all directions with MuCell®.

Like in solid injection moulding:	shrinkage onto core
Unlike in solid injection moulding:	no shrinkage away from the outer wall of the tool!!

5.4.3 Specifications for rib design

The MuCell® process offers more freedom in rib design than solid injection moulding. The following principle applies: “design for function and not for filling behaviour”.

Given that, in the MuCell® process, components are filled not by the holding pressure but by the foam pressure applied everywhere, even greater wall and rib thicknesses can be realised, especially at the end of the flow path. The component can therefore be designed to suit the load.

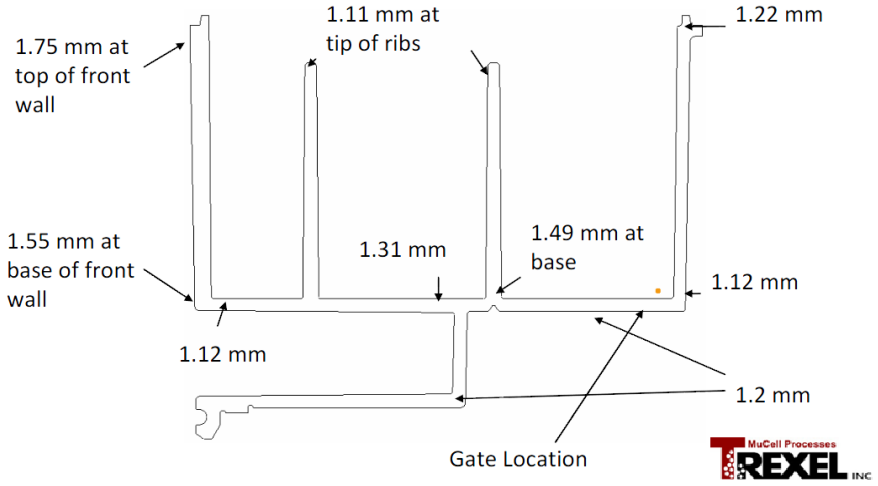

Figure: Wall thickness design and ribs according to the company Trexel

5.4.4 Note the mechanical characteristics of the MuCell® material!

MuCell® material properties with equal wall thickness in comparison with solid injection moulding

Reduction of:

Tensile and breaking strength	=	lower strength
Tensile and bending modulus of elasticity	=	lower stiffness
Elongation at break	=	material embrittled

Reduction factor equates to approx. twice the foam rate
(i.e. for 5% foam rate = 10% lower material characteristic values)

5.4.5 Injecting the component from thin to thick

In the MuCell® process, plastic parts are filled not by the holding pressure but by the foam pressure. Areas with thin walls require a higher pressure to shape the cavity. These areas should therefore lie as close to the gate position as possible during foam injection moulding because the relatively high injection pressure (250 to 300 bar) is used for filling here. Areas with thicker walls are filled by free expansion using the relatively low foam pressure (approx. 40 bar). This is the best way to exploit the weight reduction potential of the MuCell® process.
In contrast, filling in solid injection moulding should be from thick to thin in order to achieve the maximum holding pressure effect in all areas.

5.5 Quick guide to component design with MuCell®

Possible wall thicknesses	1.4 mm - 2.8 mm based on reduction in viscosity
Ribs	Attachment of rib to wall 1:1 possible
Draft angles	1 - 2° in general 1° per side with ribs up to 10 mm in height 2° per side with ribs above 10 mm in height
Wall thickness steps	Pay attention to chamfering
Tolerances	Like in solid injection moulding
Sink marks	No sink marks due to expansion
Holes	Like in solid injection moulding
Screw bosses	Attach bosses for improved ventilation with ribs Avoid material accumulation Wall thicknesses like with ribs
Catchers	Design with walls that are as thin as possible
Shrinkage test dimensions	Add test dimensions in the form of ribs
Radii	Radii at least R 0.5 mm
Warpage	(Slight) improvement compared to solid injection moulding The minimum foam rate for improving warpage should be 5%.
Material	(Virtually) any materials can be used
CAD analysis	Every component must undergo a simulation of the filling process and a wall thickness analysis; a structural analysis is recommended.
Injection	Inject from “thin to thick”
Flow obstacles	Avoid unnecessary breakouts
Surface quality	Class B visible surfaces possible at best Design grains to be generally coarse and deep in order to conceal streaks, which are typical with MuCell®
CAD SmarTeam	Details can be found in 5.14
Metal inserts	No advantage from preheating, otherwise like solid injection moulding

5.6 Specifications for MuCell®-oriented component design

5.6.1 Component design with the MuCell® process

This section sets out the basic principles, approach and specifications for designing components with the MuCell® process.

5.6.2 Specifications for designing the basic wall thickness

Minimum wall thickness: 1.4 mm
Maximum wall thickness: 2.8 mm

Given that, in the MuCell® process, components are filled not by the holding pressure but by the foam pressure applied everywhere, even greater wall and rib thicknesses can be realised, especially at the end of the flow path. The component can therefore be designed to suit the load.

Wall thicknesses that are thinner than in solid injection moulding can be realised because the melt viscosity is lower.

Areas with thin walls must be avoided at the end of the flow path as only foam pressure is applied here to fill the mould.

In theory, wall thicknesses of up to 4 mm are also possible in the MuCell® process, but this leads to a longer / more expensive cooling time, which makes the process uneconomical.

Thicker wall thicknesses do not lead to shrink holes but, through more powerful expansion, to a coarser foam structure.

Injecting the component from thin to thick

In the MuCell® process, plastic parts are filled not by the holding pressure but by the foam pressure. Areas with thin walls require a higher pressure to shape the cavity. These areas should therefore lie as close to the gate position as possible during foam injection moulding because the relatively high injection pressure (250 to 300 bar) is used for filling here. Areas with thicker walls are filled by free expansion using the relatively low foam pressure (approx. 40 bar). This is the best way to exploit the weight reduction potential of the MuCell® process.
In contrast, filling in solid injection moulding should be from thick to thin in order to achieve the maximum holding pressure effect in all areas.

5.6.3 Specifications for rib design

The MuCell® process offers more freedom in rib design than solid injection moulding. The following principle applies: “design for function and not for filling behaviour”.

Given that, in the MuCell® process, components are filled not by the holding pressure but by the foam pressure applied everywhere, even greater wall and rib thicknesses can be realised, especially at the end of the flow path. The component can therefore be designed to suit the load.

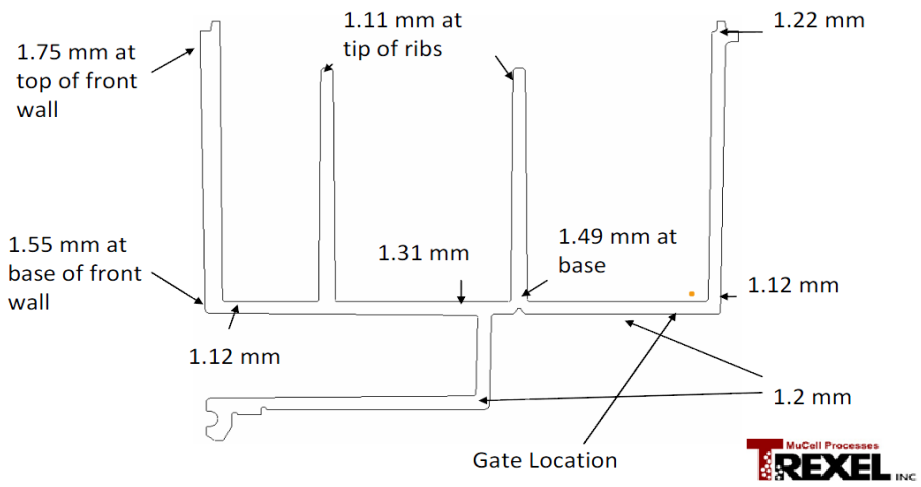

Figure: Wall thickness design and ribs according to the company Trexel

However, attention must be paid to several specifications in rib design, too, particularly in relation to cost efficiency.

5.6.3.1 Rib thickness

Wall to rib thickness ratio: up to 1:1 possible

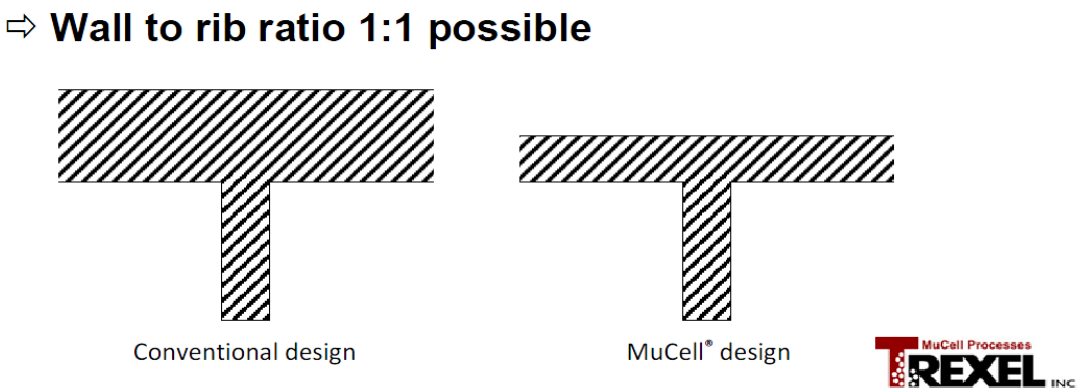

5.6.3.2 Rib geometry

Ribs of up to 10 mm in height must be designed with a draft angle of at least 1° per side.

Ribs must be attached to the basic wall with a radius of R0.5 mm.

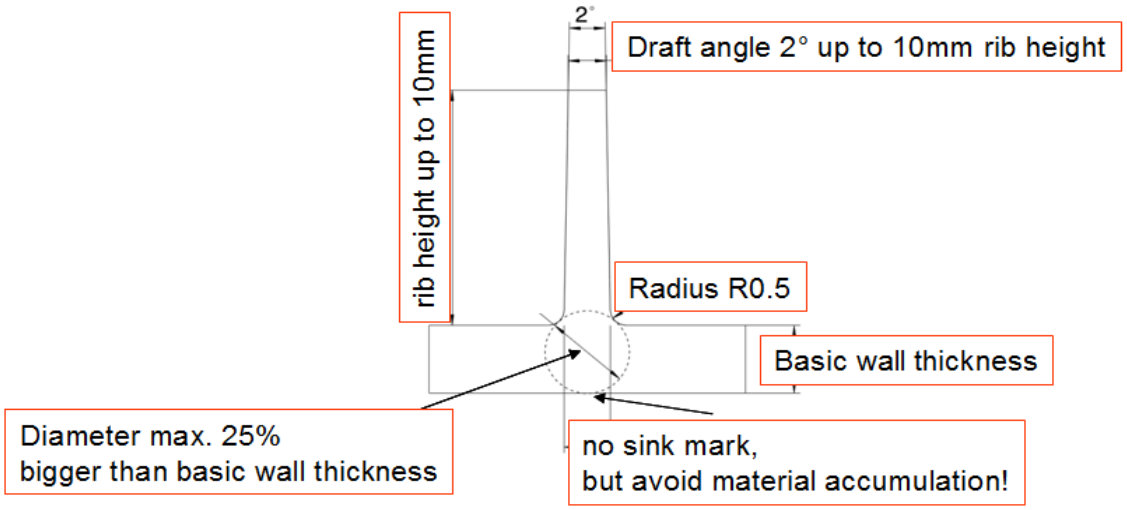

Ribs above 10 mm in height must be designed with a draft angle of at least 2° per side.

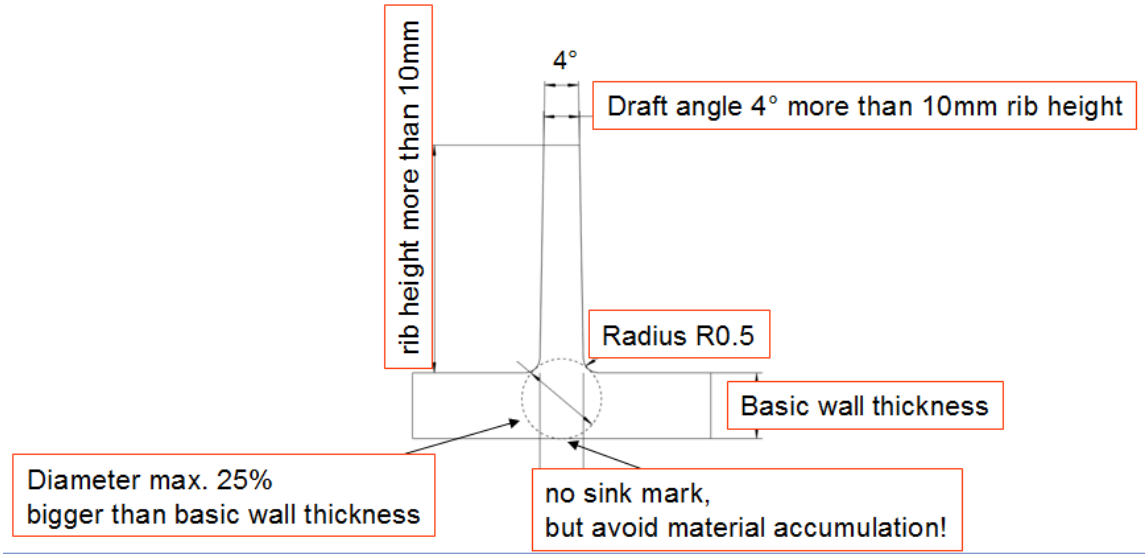

5.6.3.3 Minimum thicknesses for ribs

Minimum thickness for ribs near the gate position (up to 100 mm distance from the gate position):

- Semi-crystalline plastics up to 0.9 mm wall thickness
- Amorphous plastics up to 1.1 mm wall thickness
- However, good ventilation must be ensured here!

Rib thickness for ribs away from the gate position (over 100 mm distance from the gate position):

- Thickness similar to basic wall thickness because only foam pressure is used for filling

5.6.3.4 Honeycomb structure

Honeycomb structures should be avoided with MuCell® components as these areas are very difficult to release from the mould with the MuCell® process.
If honeycomb structures cannot be avoided, a minimum draft angle of 4 to 5° must be observed.
The inner diameter of the honeycomb must exceed 15 mm in order to be able to cool this area.

Given the difficulty involved in releasing, wall areas with honeycomb structures must be protected against damage caused during release by means of retainer ribs or clamps in the tool.

5.6.3.5 Avoidance of honeycomb structures using structural analysis

For the sake of avoiding honeycomb structures, a structural analysis of the component is strongly advised in order to determine the areas that are subject to the most stress.
Based on the structural analysis, components can be strengthened purposefully with straight rib courses without having to resort to surface reinforcement using a honeycomb structure.

Description of the structural analysis process:

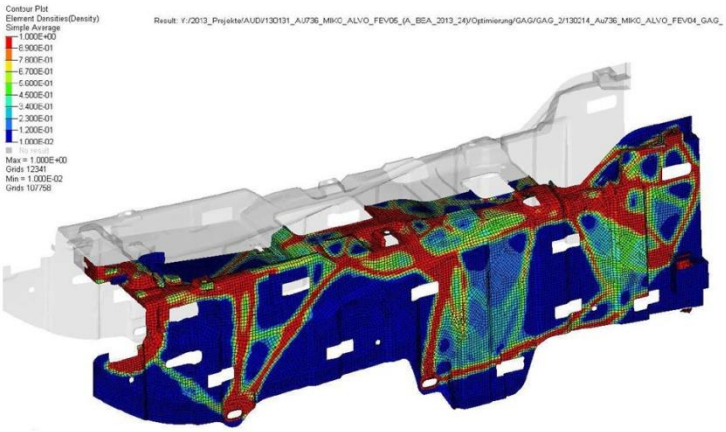

Figure: Presentation of the results of the structural analysis

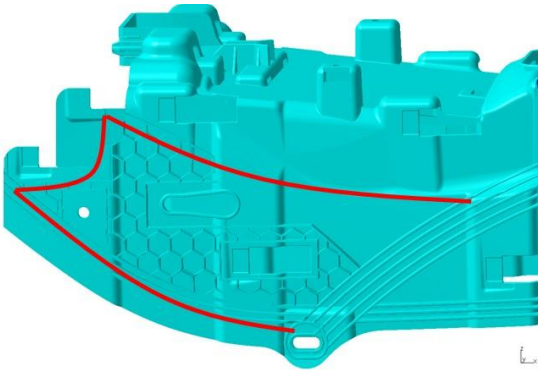

Figure: Rib course with honeycomb structure prior to optimisation - red line for rib suggestion based on structural analysis

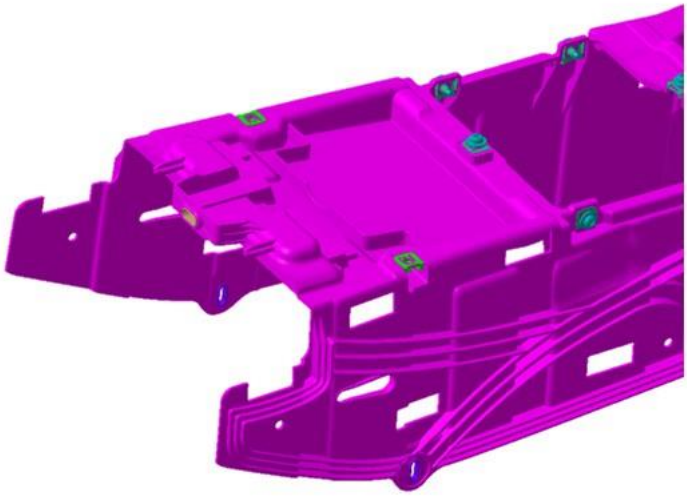

Figure: Rib course without honeycomb structure after structural analysis and optimisation

Improvements using Q7 support as an example:

- Replacement of honeycomb structure with rib pack
- Ribs match flux of force
- Only 3 ribs instead of 5
- Ribs designed to be thicker
- Ribs at 15 mm distance for cooling

5.6.4 Wall thickness steps

Wall thickness steps must be rounded to avoid a coarse MuCell® structure.

Wall thickness steps should be filled from thin to thick.

Wall thickness steps should not exceed the ratio of 1 : 3 from thin to thick wall.

Wall thickness steps can be realised without differences in shrinkage since the inner holding pressure effect of foaming balances out the various shrinkage potentials.

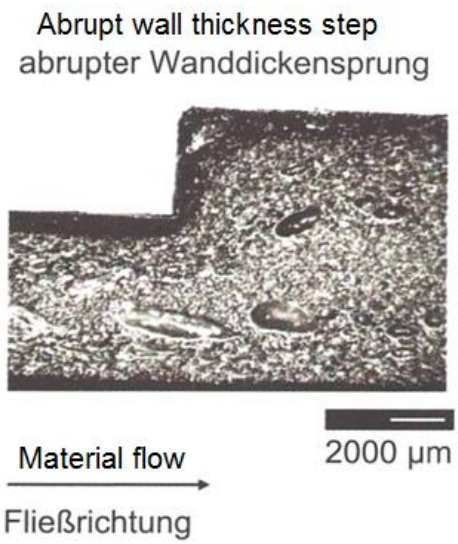

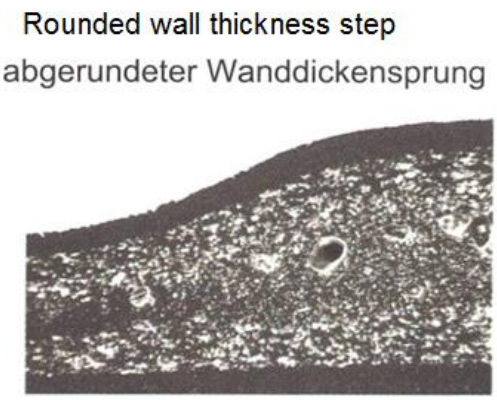

5.7 Design for MuCell®-oriented release

A component manufactured using the MuCell® process expands during cooling. As a result, MuCell® components are held more tightly in place in the tool. For this reason, the release of the component requires even more attention than in solid injection moulding.

5.7.1 Draft angles

Release specifications:

General minimum draft angle
1° - 2° per side in general
1° per side with ribs up to 10 mm
2° per side with ribs above 10 mm

This equates to roughly twice the size of the draft angles in solid injection moulding.

Minimum draft angle for honeycomb structures is 4° - 5°.

Honeycomb structures larger than 15 mm in diameter
Ideally avoid honeycomb structures
For geometries that are difficult to release, fix in place with retainer clamps

Draft angles must be analysed using the CATIA analysis module in all directions of release. If the above requirements are not met, the corresponding areas must be optimised as well as possible.

5.7.2 Shrinkage

MuCell® components demonstrate roughly 10% more shrinkage. However, this shrinkage is distributed across the component more evenly than in solid injection moulding.

5.7.3 Calculating shrinkage values

Provide test dimensions that are easy to measure (see sketch) in longitudinal and horizontal direction in the form of ribs on the component so that the degree of shrinkage can be determined using these ribs.
This data should help to build up a database for evaluating different materials with different gas contents and their characteristic shrinkage.

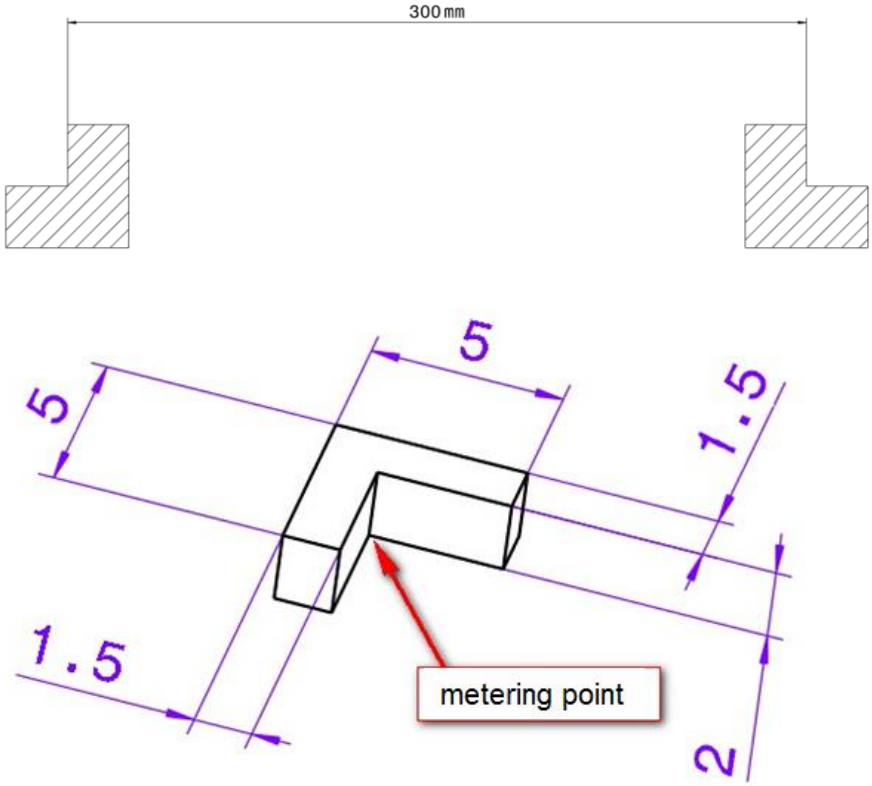

Figure: Measurement geometry sketch

5.7.4 Tolerances

In the MuCell® process, the same tolerances can be observed as in solid injection moulding.

5.7.5 Radii

As in solid injection moulding, radii must be at least R0.5 mm.

5.7.6 Sink marks

No sink marks due to material expansion after injection.

5.7.7 Holes

Provide holes as in solid injection moulding

Depth of up to twice the diameter
Distance from the wall or another hole is the same as the diameter of the hole
For screw-ins, three times the distance of the diameter

5.7.8 Screw bosses

Avoid material accumulation!
All areas with more than a 25% increase on the basic wall thickness extend the cycle time and must therefore be optimised as well as possible!

Attach bosses for improved ventilation with ribs

Design wall thicknesses as with rib design

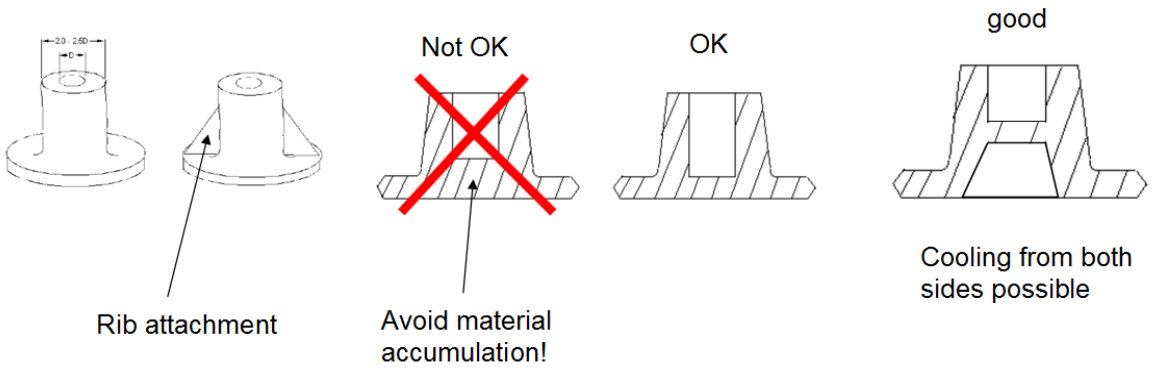

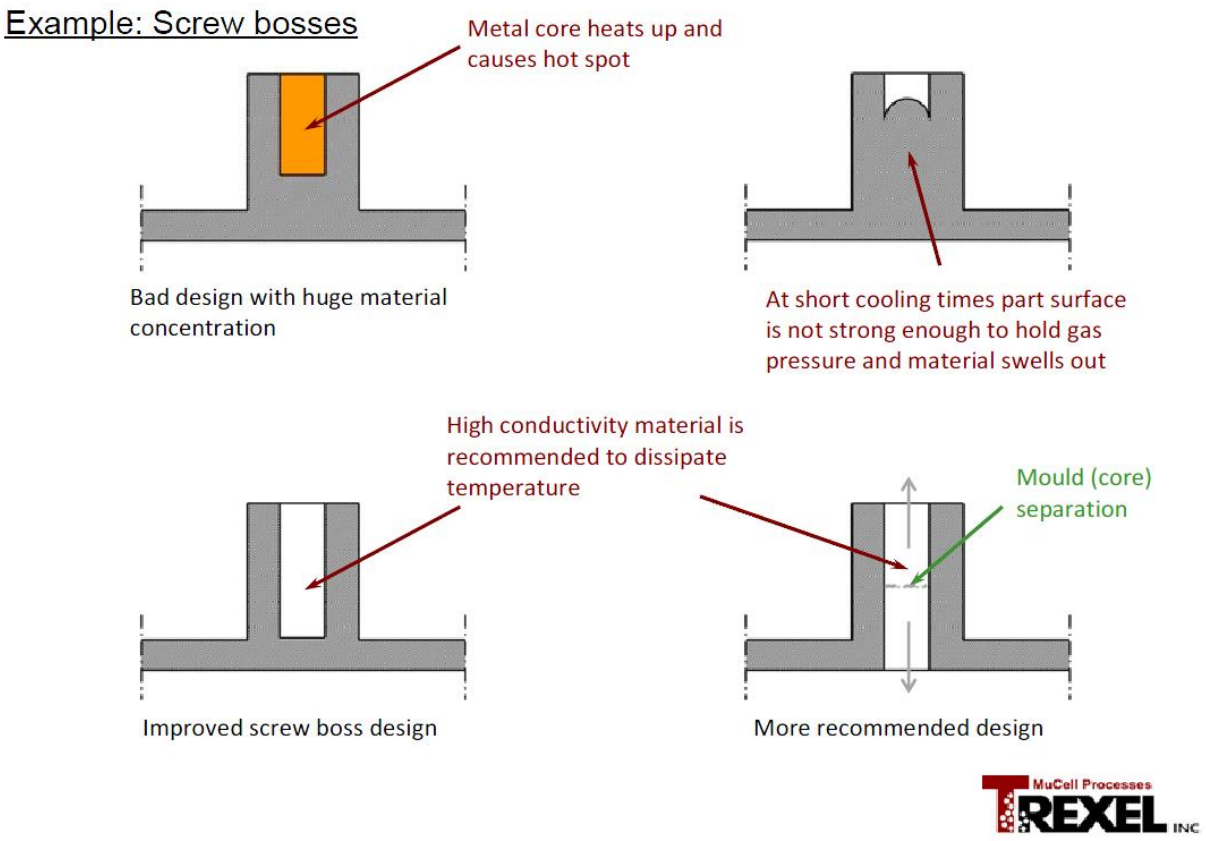

5.7.9 Catchers

For catchers, make the walls as thin as possible to avoid expansion and any accompanying embrittlement.

5.7.10 Metal inserts

In the MuCell® process, there is no advantage to be gained from preheating the metal insert since it is inherently stress-free.

Similar design to solid injection moulding:

Free of sharp edges.

5.7.11 Flow obstacles, breakouts

Flow obstacles and breakouts impair mechanical properties as the foam rate is greater behind these areas. The weld line strength is clearly reduced.

For this reason, unnecessary breakouts in areas subjected to mechanical loads must be avoided or geometrically improved.

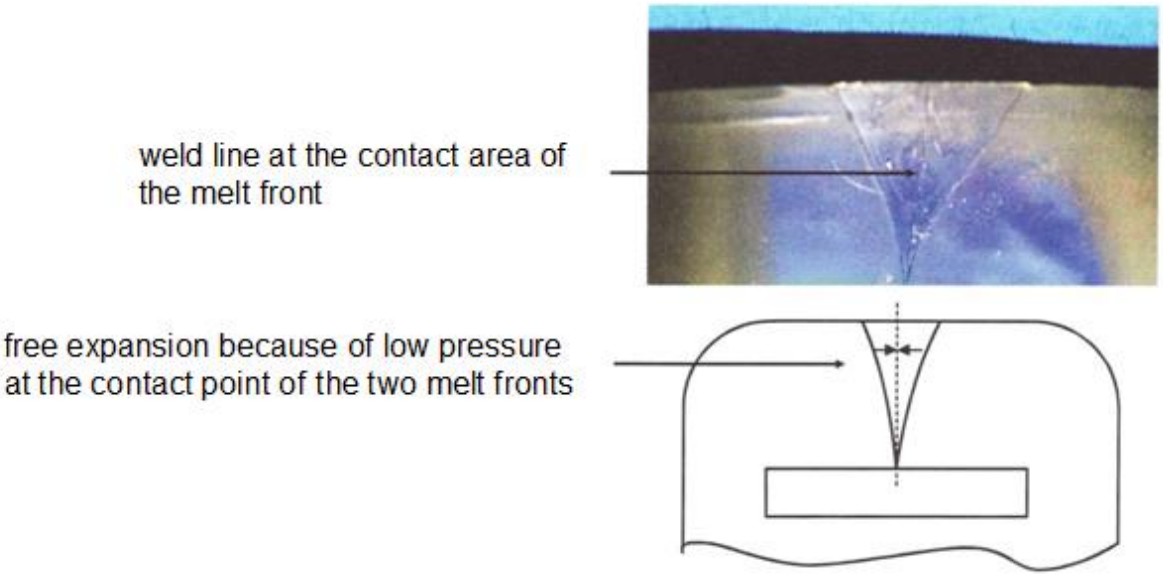

Figure: Filling behaviour during foam injection moulding behind flow obstacles

5.8 Component warpage (stress warpage)

Components manufactured using the MuCell® process generally demonstrate less warpage than components made with solid injection moulding. However, the process affects the various types of warpage in plastic injection moulding differently.
The minimum foam rate for improving warpage should be 5%.

5.8.1 Moulded-in stresses caused by holding pressure

Improvement since the omission of holding pressure eliminates (minimises) this warpage in the component.

5.8.2 Warpage caused by temperature differences during release

No improvement in warpage due to different temperatures for the released component
e.g. inner radius ⇔ outer radius remains.

5.8.3 Warpage caused by ribs

No improvement due to MuCell® technology
Design ribs as symmetrically as possible

5.8.4 Warpage caused by glass fibre orientation

With wall thicknesses greater than 2 mm, warpage caused by glass fibre orientation is reduced given that the glass fibres do not face the direction of flow in the foam structure.
With wall thicknesses below 2 mm, the impact is less because the glass fibres in the boundary layer face the direction of flow and the boundary layer share is larger in thin components.

5.9 Overview of the analysis process for MuCell® component evaluation

This summary partially repeats the previously explained processes.

5.9.1 CATIA wall thickness analysis

Material accumulations in the component design must be avoided since the designed boundary layer in these places cannot withstand the internal gas pressure. At these hot spots, the pressure can cause the component to swell out. This is known as the post-blow effect.

The same also applies in relation to small cores which cannot be cooled accordingly.
Warning: Cooling is only possible with a core diameter of 15 mm or more!

In CATIA, a simple wall thickness analysis can be performed using the "**Wall Thickness Analysis**" tool.

In principle, every plastic part should be examined, and especially MuCell® components, as the post-blow effect can occur here due to insufficient cooling.

Design specification:
All areas with more than a 25% increase on the basic wall thickness extend the cycle time and must therefore be optimised as well as possible!
WARNING: This requirement applies in particular to functional areas and to areas with connection geometry!

Example of a wall thickness analysis using the CATIA analysis module

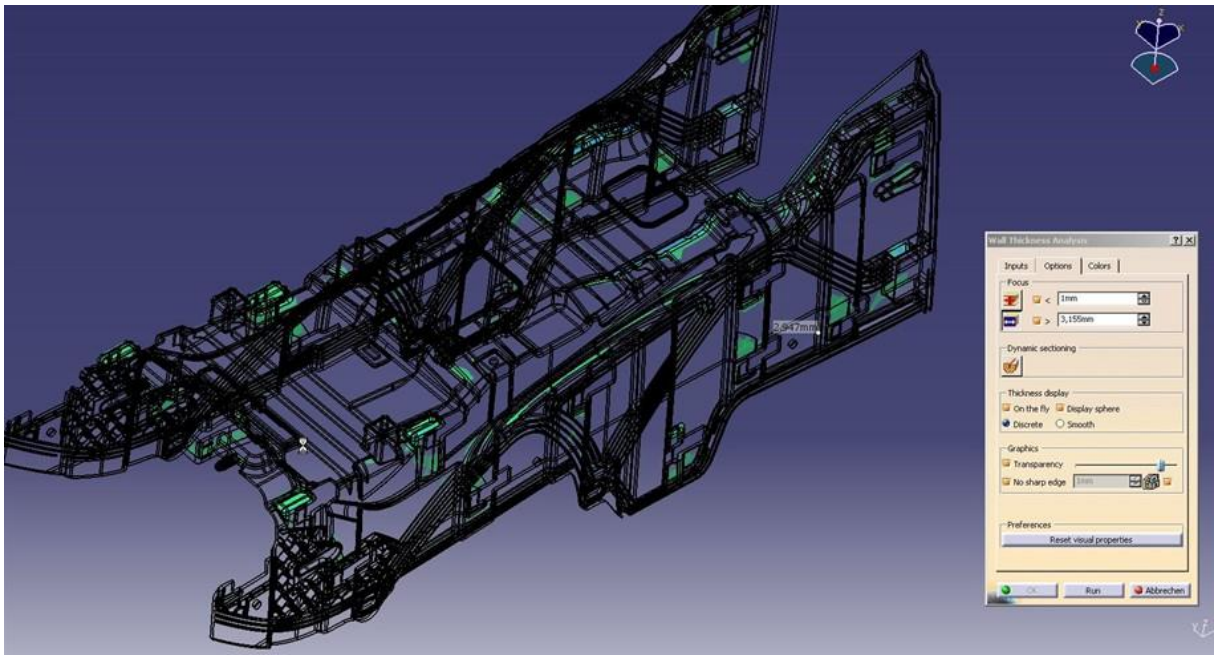

5.9.2 CATIA draft analysis

General minimum draft angle
1° - 2° per side in general
1° per side with ribs up to 10 mm
2° per side with ribs above 10 mm

Minimum draft angle for honeycomb structures is 4° - 5°.

Draft angles must be analysed using the CATIA analysis module in all directions of release. If the above requirements are not met, the corresponding areas must be optimised as well as possible.

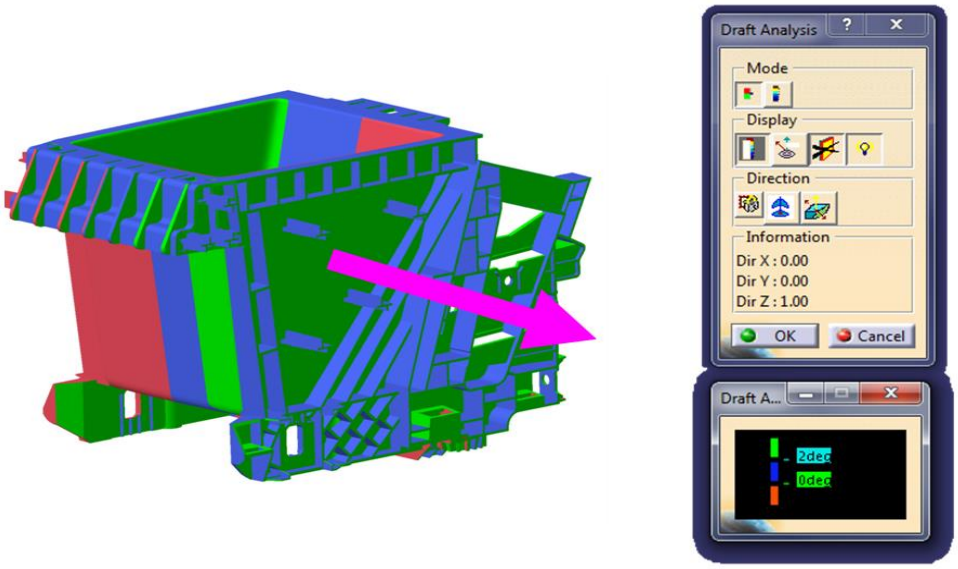

5.9.3 FEM calculation

The MuCell® process impairs the mechanical characteristics of the starting material.
This is particularly true in areas away from the gate position and areas around flow obstacles and breakouts.

A FEM calculation must be performed for every MuCell® component.
The known characteristic value reductions must be taken into account when analysing the calculation.
If there are no known values, a value that is twice the foam rate should be assumed as the reduction.
Example:
Tensile strength for original material of 50 MPa results in a tensile strength of 40 MPa with a 10% foam rate.

Large areas with high stresses that lie away from the gate position must be given special attention and optimised geometrically if possible.
Areas that are subjected to high loads with breakouts must also be optimised geometrically, or the breakouts must be avoided.

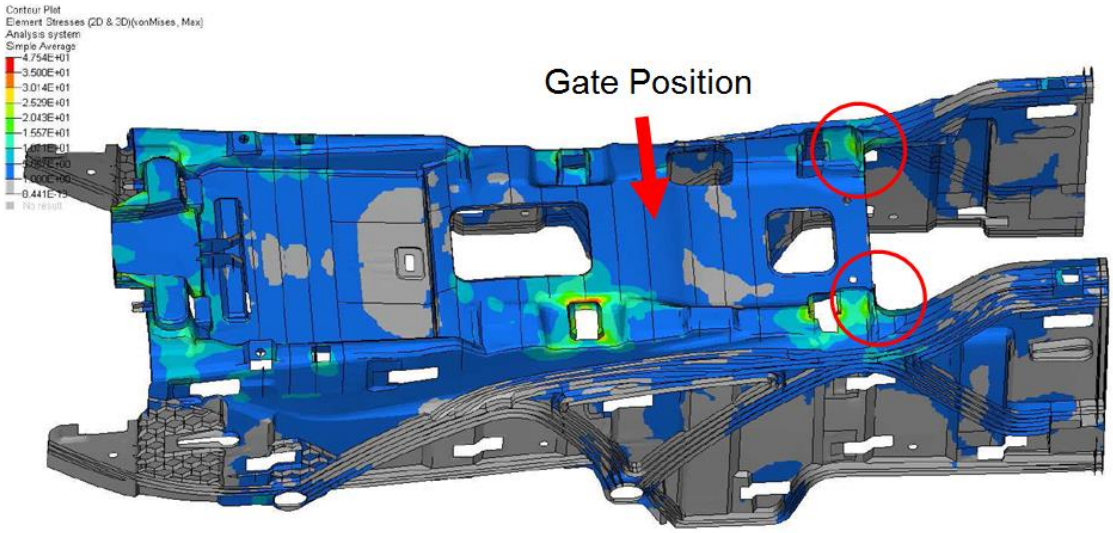

Figure: FEM calculation

5.9.4 Simulation of the filling process

Every component that is to be made using MuCell® must undergo a filling simulation analysis to ensure even filling and, with this, even expansion.

5.9.5 Structural analysis

In general, a component structural analysis should be carried out for all plastic parts to determine the areas that are subject to the most stress.
Based on the structural analysis, components can be strengthened purposefully with straight rib courses without having to resort to surface reinforcement using a honeycomb structure. As a result, areas that are difficult to release can be avoided and material to reinforce the component can be used purposefully and sparingly.

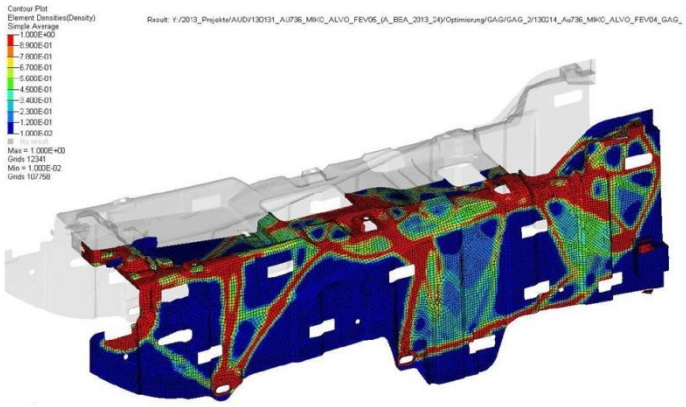

Figure: Presentation of the results of the structural analysis

5.10 Material selection

All plastics within the scope of this work instruction can be used for the MuCell® process. However, their general suitability differs.

Amorphous plastics are better suited than semi-crystalline ones since crystallisation impedes the formation of foam cells.

Filled plastics are significantly better than unfilled ones because fillers serve as nucleating agents for the foam cells.

Overview of the foamability of various plastics:

Material	Foamability	Description
PC (amorphous)	Very good	
PS (amorphous)	Very good	
PA6 GF (semi-crystalline)	Good	Very good control of foamability
PP GF (semi-crystalline)	Good	Glass fibres support cell growth more effectively than talc
PP T20 (semi-crystalline)	Good	
PA6 (semi-crystalline)	Average	
ABS – PC (amorphous)	Average	PC = Very good foamability ABS = Poor foamability
ABS (amorphous)	Poor	With ABS it is hard to achieve an even gas content - cell formation difficult as no “germs” present.
HDPE (semi-crystalline)	Poor	Very susceptible to the formation of larger bubbles; there is no sense in foaming HDPE without a nucleating agent.

5.11 General overview of material properties compared with solid injection moulding

In direct comparison with components made using solid injection moulding, TSG components demonstrate significantly altered mechanical properties. The effect becomes greater as the foam rate grows.

solid	foamed (integral foam structure)		
	equal wall thickness	equal bending stiffness	equal part weight
wall thickness	equal	a bit bigger	bigger
weight	smaller	a bit smaller	equal
bending stiffness	smaller	equal	bigger
density	smaller	smaller	smaller
elastic modulus	smaller	smaller	smaller
section modulus	equal	a bit bigger	bigger

At the same component weight, the bending strength of a foamed plate increases.

Reason: The gain in wall thickness disproportionately improves the bending strength and therefore balances out the reduction in the material elastic modulus and material strength.

5.11.1 Material properties at the same wall thickness

Based on the same wall thickness, the characteristic values of the material are reduced in the MuCell® process compared to solid injection moulding. This reduction depends on the material, aggregates, process parameters, component geometry and other factors.

The following are reduced:

Tensile and breaking strength = lower strength
Tensile and bending modulus of elasticity = lower stiffness
Elongation at break = material embrittled

The following is generally specified for the strength calculation:

The reduction factor of the material characteristics equates to twice the foam rate
(i.e. for 5% foam rate = 10% lower material characteristic values)

Sample stress-strain curve
Comparison between solid and MuCell® at 10% foam rate for material PP

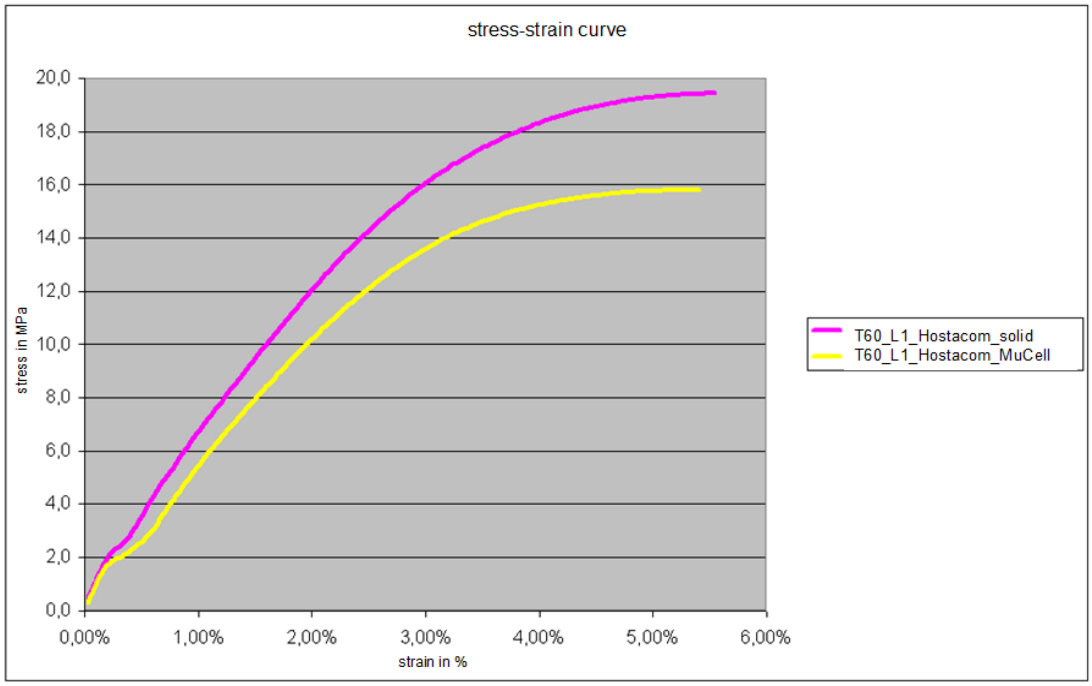

5.11.2 Different foam rates in the component

Definition of foam rate = density reduction in the component

The foam rate or density reduction varies over an entire component.

In the area near the gate position (up to approx. 100 mm away from it), the foam rate is lower and the mechanical characteristics are therefore better. The characteristics reach almost the same level as a material made with solid injection moulding.
In the area away from the gate position (over 100 mm away from it), the foam rate is higher and the mechanical characteristics are therefore worse. Here, the reduction factor from the above paragraph should be taken into account accordingly.

When mechanically designing a component, attention must definitely be paid to the differences in density. Areas subjected to high mechanical loads must be near the gate position.

5.11.3 Acoustic properties

MuCell® components demonstrate higher acoustic damping than solid components.

5.12 Dynamic strength

The MuCell® process must not be used for head boxes!

MuCell® components have only conditional suitability for dynamic loads.

Given the reduction in elongation at break caused by the MuCell® process, the component is far less able to deform than a solid component.
So, much lower loads will already lead to component failure.

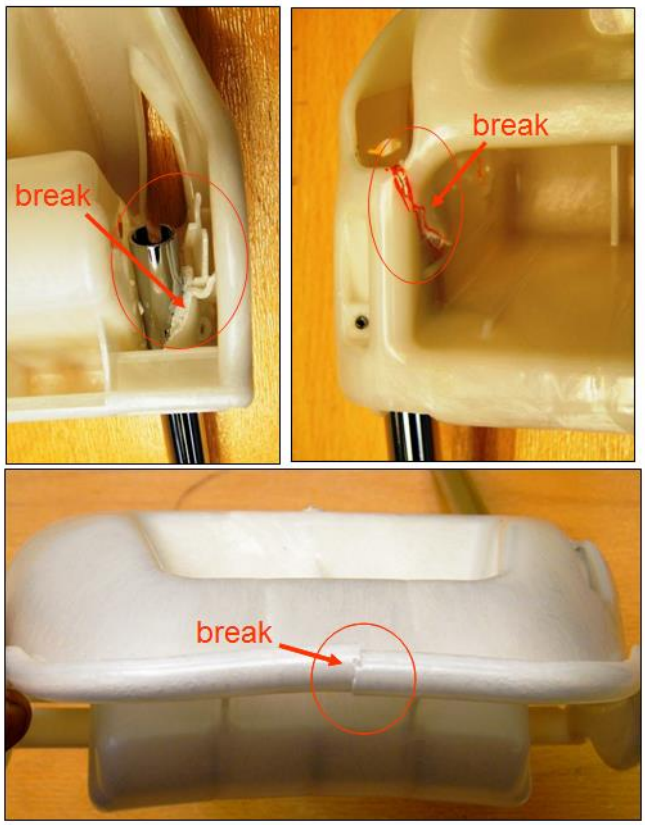

WOKS II headrest with HDPE HMA025 MuCell® 12%

5.13 Surface quality

5.13.1 Formation of streaks in the MuCell® process

The surface quality of MuCell® components does not match that achieved in solid injection moulding.

The streaky surface is the result of contact between released gas bubbles and the cold wall of the tool.

5.13.2 Reducing streaks

There are usually more streaks visible in areas near the gate position.

The intensity of the streaks also depends on the polymer used, the injection speed and the gas content of the melt.

The higher the gas content of the melt, the greater the formation of streaks.

To achieve an optimised surface, the gate and the end of the flow path should not lie in the visible area.

Ribs perpendicular to the direction of flow cause turbulence, which results in a poorer surface.

5.13.3 Using grain to improve the surface

Generally speaking, the grain should be coarse and deep to achieve an improvement in the surface.
Plateaus in the surface are not good for concealing streaks.
Eroded grains are preferable to etched grains.

The company Trexel recommends grains according to VDI 27 and greater grain depths.

Corresponding grains used at Grammer:

VDI 27, 30, 33, 36

Overview of surface qualities of already sampled materials

Material	Surface	Corrective measures
PP T20	Intense formation of streaks with ungrained surface Surface becomes more matt	Graining may make the surface more matt and easily stained Suitable for class B visible surfaces
PA6 GF 30	Acceptable surface with few streaks Surface becomes more matt	Good surface possible with graining
ABS-PC	Very intense formation of streaks	Visible surface not possible even with graining
ABS	Formation of streaks with ungrained surface	

According to current knowledge, only possible for class B visible surfaces to date, see B205 project.
Class A visible surfaces are not possible.
Reason: Components usually have a streaky surface and therefore do not meet the standard class A visible surface requirements of OEMs!

5.13.4 Solid / MuCell® comparison, ungrained

Solid

MuCell ®

5.13.5 Solid / MuCell® comparison, grained

Solid

MuCell ®

5.14 Information for MuCell® materials in drawings, CAD and SmarTeam

5.14.1 Grammer materials database for MuCell® in CAD and SmarTeam

MuCell® materials are stored in the database with their foam rate.
Before a new MuCell® material is created, the database must be checked for similar materials with a similar foam rate.
The following text is added in line 2 of the material field in the drawing title block:
"MuCell xx % foam rate"

In SmarTeam, the material data sheet of the foamed thermoplastic is appended to the profile card.
The material data sheet contains a new first page with the warning for MuCell®:
MuCell® warning: The MuCell® process alters the mechanical characteristics of the starting material. This usually results in lower material values than those listed in the following data sheet.

Search term for MuCell® materials in the database:
MuCell or foam rate

5.14.2 Weight management

Grammer AG	No special instructions, since all material data for MuCell® is stored in the materials database and the specific weight is adapted.
Daimler	Select material and, after DAG approval, transfer weight entry manually according to SmarTeam entry.
VW	Material and weight are to be entered manually in the usual manner.

5.14.3 Drawing entry

Grammer AG	For single part drawing in line 2 of the material field; entered directly via profile card
OEM drawings	According to OEM specifications (no known specifications yet)
Parts identification	Like solid injection moulding, no further details required according to VDA260

5.15 Surface finishing and subsequent production processes

5.15.1 Gas emission from MuCell® components

Freshly injected components should not be used in a subsequent process because the gas dissolved in the component is released from the material again after the injection moulding process.

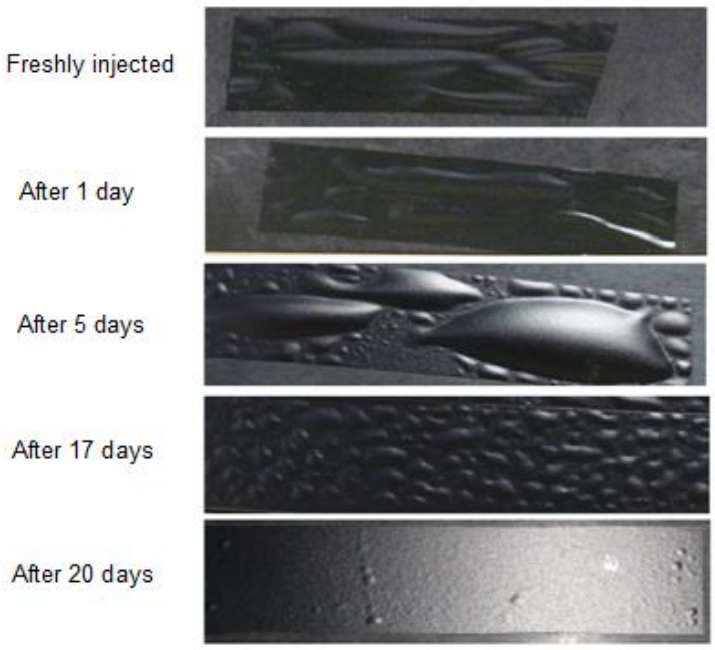

Gas emission bubbles in adhesive tape stuck to the MuCell® component

5.15.2 MuCell® with visible components – approval necessary!

The approval of the Team leader Process Development is required for use of the MuCell® process for visible components.

This must be documented explicitly upon transition from one phase to another.

Reason: Components usually have a streaky surface and therefore do not meet the standard class A visible surface requirements of OEMs!

5.15.3 MuCell® with film-laminated components – approval necessary!

The approval of the Team leader Process Development is required for use of the MuCell® process for film-laminated components.

This must be documented explicitly upon transition from one phase to another.

Reason: Components continue to release gas after injection moulding!

The impact on subsequent processes has yet to be established conclusively.

5.15.4 MuCell® for flocked components – approval necessary!

The approval of the Team leader Process Development is required for use of the MuCell® process for flocked components.

This must be documented explicitly upon transition from one phase to another.

Reason: Components continue to release gas after injection moulding!

The impact on subsequent processes has yet to be established conclusively.

5.15.5 MuCell® with painted components – not permitted!

The MuCell® process has not been approved for painted components.

Reason: Components continue to release gas after injection moulding!
MuCell® components have surface defects!

5.15.6 MuCell® for welding process – permitted

MuCell® components can be welded one hour after injection moulding. A shorter process cycle has yet to be tested.

Apart from this, there are no major differences from solid components.

Solid components can also be welded to MuCell® components without any problems.

5.16 Injection moulding tool design

Requirements set out in tool specifications
“F_012_002 Technical specification for requesting and procuring injection moulding tools” in the GBS

6 Applicable documents

Technical specification for requesting and procuring injection moulding tools	F_012_002

7 Changes

None